JENNIFER SEEVINCK

How and why might an architectural design practice inform virtual reality design?

B2041405S

JENNIFER SEEVINCK

How and why might an architectural design practice inform virtual reality design?

Sub-thesis

Submitted in partial completion of the requirements for the degree of Master of Philosophy (Electronic Arts) Computer Animation.

Australian National University
Australian Centre for the Arts and Technology
Institute of the Arts

June 1999

CONTENTS

Acknowledgements vii

List of Illustrations viii

CHAPTER I

1.1 Overview of the Thesis Question 1

1.2 Introduction to the Nature of Cyberspace 1

1.3 The Nature of Cyberspace 2

1.3.1 Cyberspace and Virtual Reality

1.3.2 What is the Quality of Cyberspace?

1.4 Immersive and Desktop Systems 4

1.5 Current Virtual Reality Technology and Interface Design Approaches 5

CHAPTER II

2.1 Introduction to Place in Cyberspace 8

2.2 Why look for Meaningful Cyberspace? 8

2.3 The Difficulties of Designing Place in Cyberspace 9

2.3.1 Context

2.3.2 Navigation

2.3.3 Boundaries

2.3.4 Body, Distance, Speed

2.3.5 Differentiation

2.3.6 Timelessness

CHAPTER III

3.1 Introduction to Architectural Metaphor 15

3.2 Metaphor 16

3.3 Erickson's Method for Generating Metaphors 17

3.3.1 Functional Definition

3.3.2 Identifying User's Difficulties

3.3.3 Metaphor Generation

3.3.4 Evaluating Interface Metaphors

CHAPTER IV

4.1 Introduction to Architectural Design for Virtual Reality Design 20

4.2 What is Architecture? 20

4.2.1 Architecture as Place

4.2.2 What is Material Space in Architecture?

4.3 The Dialogue 22

4.3.1 Meaning

4.3.2 Order

4.3.2.1 Grid

4.3.2.2 Landmarks

4.4 How can the Metaphor of Architectural Design Practice apply to the Design of Cyberspace? 23

4.4.1 Orientation

4.4.1.1 Navigation

4.4.1.2 Cognitive Maps

4.4.1.3 Degrees of Freedom
4.4.1.4 Environmental and Other Cues
4.4.1.5 Depth
4.4.1.6 Speed and Movement
4.4.2 Identification
4.4.2.1 Scale
4.4.2.2 Formal or Abstract Structure
4.4.2.3 Localisation
4.4.2.4 Time
4.4.2.5 Ritual
4.4.2.6 Community

CHAPTER V

5.1 Introduction to The Philosophy of Virtuality 29
5.2 What is the Theory of Virtuality? 29
5.2.1 Introduction to the Theory of Virtuality
5.2.2 Coexistence on the Continuum
5.2.3 Qualitative Multiplicity
5.2.4 Differentiation
5.2.5 Primordial Differential
5.2.6 Expansion and Contraction
5.2.7 Duration
5.2.8 The Possible and the Virtual
5.3 The Space of Virtuality 33

CHAPTER VI

6.1 Introduction to how movement activates meaningful space, in particular virtual space. 34

6.2 An Evolution of Movement in Western Architectural Space 34

6.2.1 Introduction

6.2.2 Movement in Material Space

6.2.3 Movement in Virtual Space

6.2.4 The Active Space of Design

6.3 Conclusion 46

CHAPTER VII

7.1 'blue in the bluebird', June 1999 48

7.2 'squarewaves', June 1997 51

7.3 'Space for Reflection', November 1996 52

7.4 'cyclicommotion', June 1996 54

7.5 Images from 'Raising the Standard', June 1997 55

Appendix A 57

Bibliography 60

ACKNOWLEDGEMENTS

The author gratefully acknowledges the assistance and support of David Worrall, Stuart Ramsden, Julie Fraser, Tim Kreger, Drew Whitehouse, Alan Lusso and Adam Steer.

The following facilities were used to produce this thesis:

The Australian National University libraries and laboratories, the Australian Centre for the Arts and Technology, Institute of the Arts laboratories, Canberra School of Art library, ANU Supercomputing Visualisation Facility, High Performance Computing Laboratory at ANU Computer Science, the National Library of Australia, the National Gallery of Australia.

LIST OF ILLUSTRATIONS

(I) *Pantheon, Rome. Etching.* (Wilton-Ely 1978:136)

(ii) *Time in Western Architecture. Drawing by Zevi.* (Zevi 1978)

(iii) *Domitilla catacomb, Rome. Entrance stairway.* (Ferrua 1991:8)

(iv) *S. Carlo alle Quattro Fontane, Rome. Interior views of the dome.* (Norberg-Schultz 1971:172-173)

(v) *Carceri D'Invenzione (xiv). Etching by Piranesi.* (Wilton-Ely 1978)

(vi) *Parthenon.. North-west corner.* (Rodenwalt 1957)

(vii) *Villa Savoye. Analysis of Movement.* (Baker 1984:157)

(viii) *Falling Water. Stairs and canopy to guest house.* (Pfeiffer 1993:158)

CHAPTER I

1.1 Overview of the Thesis Question:

How and why might an architectural design practice inform virtual reality and interface design?

This thesis focusses on designing in and for meaningful immersive cyberspace through architectural, spatial and praxis metaphor.

It looks for ways in which architecture can inform meaningful design: the design of place.

It looks towards a fully extended virtual space, the impossible (what cyberspace can be that the real physical world is not) and the unpredictable. As stated above, this includes spaces mostly for occupation but also for creation.

1.2 Introduction to the Nature of Cyberspace

This chapter establishes some of the qualities of cyberspace and virtual reality. The term 'Virtual Reality' is abbreviated to the enabling technology and 'cyberspace' to content, and their overlap is discussed through example.

Current virtual reality technology and design practices are also discussed. Approaches to design practice reflect assumptions about the nature of reality and experience. In the last section of this chapter a philosophical review of Heidegger's ideas of human existence will inform the representation of reality and construction of experience as these influence virtuality design.

1.3 The Nature of Cyberspace

Richard Coyne (1995:147) describes cyberspace as denoting an "*environment created by computerized communications networks.*" Telephone conversations, data transfer, electronic mail, ATM transactions, new mass media and virtual reality all occur in cyberspace(s). Cyberspace is "*the juncture of digital information and human perception, the 'matrix' of civilization* " (1995:150). Further, Hayles writes:

> "*Cyberspace discourse and technology, metaphor and practice, come together in the concept of virtuality...[where] virtuality can be defined as the perception that material structures are interpenetrated with informational patterns* " (Hayles 1996:4-5).

Hennessey (1997:104) agrees that Cyberspace has come to mean "*both the environment of computer mediated experience and the telecommunications networks and technologies that enable this ... understood in terms of space and geographies.*"

> "*Cyberspace...a graphic representation of data abstracted from the banks of every computer in the human system. Unthinkable complexity. Lines of light ranged in the nonspace of the mind, clusters and constellations of data. Like city lights, receding...* " (Gibson in Anders p.1).

This latter description of cyberspace uses the metaphor of "*city lights, receding*", inferring space through the depth of distance. Space is a powerful metaphor for understanding informational and other patterns. What, then, (if any) is the quality of this space? Before exploring this question it is useful to differentiate between cyberspace and virtual reality.

1.3.1 Cyberspace and Virtual Reality

Due to the limited scope of this dissertation and for reasons of clarity and simplicity, I will partly follow Marcus Novak to loosely distinguish between cyberspace as content and virtual reality as the enabling technology (Novak p.4).

Before continuing on these individually it is necessary to clarify their relationship. The distinction is not unequivical, discrete; rather it is loose, descriptive: the quantities sit on a continuum. Like the attempt to divide the world into form and substance and the division between body and spirit there is something of virtual reality in cyberspace and something of cyberspace in virtual reality: these are not mutually exclusive qualities.

The distinctions can consequently be seen to be " *distinctions of emphasis and quality, locations along a continuum that runs along several dimensions* " (Novak p.4). Furthermore, where virtual reality sits at the possible end of the continuum, cyberspace tends towards the impossible. As such, cyberspace is "*...always the 'exterior' of virtual reality, because it always reserves the additional space of possibility, in contrast to actuality* " (Novak p.4).

Novak locates the following examples on this continuum:

At the Virtual Reality end of the continuum there is the actually possible, the realisable world most similar to our own : flight simulations and architectural walkthroughs. Those worlds still within the laws of our physics but inaccessible to us follow and include microscopic and macroscopic environments, the surface of Mars or the inside of nuclear reactor such as the Heliac (ANU Wedge program environment, see Appendix A). Next come the junctures of theory and fact: the big bang, black holes and quantum mechanics are suspended between association and empirical validation (eg satellites) with our world and conjecture. The worlds of cyberspace occur at the far end, where "*Time, space, energy, and consciousness may not be the fundamental or only organizational principles for all possible (whether conceivable or inconceivable) worlds* " (Novak p.4).

1.3.2 What is the Quality of Cyberspace?

Cyberspace could be argued to be perceived in the same way as Newton perceived space: homogenous, undifferentiated, an absolute, infinite backdrop against which matter and Newtonian physics perform (Wertheim 1999:168). Descarte's model is used in immersive virtual reality environments to represent reality by locating data along three axes (x, y and z). Space is assumed to be unvarying and is measured through data represented by number,

quantitively.

However, where a cyber environment is networked, it gains differentiation through degrees of community. Variation in the quality of the space is also effected by differences in metaphors, as will be discussed in chapters 3 and 4. Inherent Differentiation in cyberspace will be pursued in chapter 2 while chapters 5 and 6 will look towards unforeseen differentiations of cyberspace and its design.

1.4 Immersive and Desktop Systems.

Virtual Reality has been described as cyberspace's enabling technology.

Sherman & Judkins (Sherman and Judkins, cited in McMillan p.1) propose a stricter definition, one which requires it to be immersive. From here this dissertation will likewise limit itself to immersive Virtual Reality, where the technology utilised will *"deeply involve or absorb the user... Immersion can be illustrated by Myron Kreuger's "duck test": if someone ducks away from a "virtual stone" aimed at their head, even while knowing the stone is not real, then the world is believeable"* (Sherman and Judkins in McMillan p.1).

Perception of depth through stereoscopic vision rather than monoscopic vision is an example that distinguishes Virtual Reality from conventional computing (McMillan p.1).

1.5 Current Virtual Reality Technology and Interface Design

Coyne draws on Rheingold in describing Virtual Reality as a

> "*...computer technology that represents sensory information and feedback with the intention of producing a convincing illusion that the user is immersed in an artificial world - a world that exists only inside the computer* " (Coyne 1994:65).

Virtual Reality has applications for visualisation in many fields such as medicine, architecture, sciences as well as for promoting education and communication and also for informing arts practice and the direction of new entertainment and games.

It utilises hardware devices to negotiate a three-dimensional scene. An example is the A.N.U. Wedge (see Appendix A) which utilises the combination of stereoscopic glasses, a head tracking system and control mouse. One can move through and manipulate a three dimensional environment such as a building interior, a remote controlled robot, or simulate and practice delicate surgery.

It is useful to closely examine models being used for cyberspace design. Just as historians write history, influencing it by their prejudices; so models, images and tools are influenced by the biases and assumptions of their authors.

"*The idea of virtual reality relies on certain assumptions about perception and representation* (Coyne 1994:65)." Virtual Reality research appears to be dominated by two schools of thought on perception and representation, the *data-oriented* and the *constructivist* approach.

Though both are widely recognised and considered interdependent, a data-oriented approach seems favoured. This relies on data for immersion and aims to recreate reality using Descarte's logic of reduction and correspondence. Perception and the sense of the real is described by ever more detail in the data input to the senses:

> *"The correspondence view of representation relies on the idea that a representation corresponds to what is out there in the object. Perspective images are realistic because ". . . there is a one-to-one mapping of the visible surfaces of the world onto the picture plane, and from there to the eye"* (Hagen in Coyne 1994:66).

The real world contains structures that we can discern and represent. Numbers and geometry, for example, are perceived as basic underpinnings of the real world, and the data-oriented view of correspondence believes that if we can capture this in the computer we will end up with an accurate reconstruction of reality (Coyne 1994:66).

Cartesian logic which underpins the data-oriented approach is based on major assumptions about the nature of reality, namely the "*...reduction of space to number, thought to logic and sense data as the basis of an understanding of being in the world* (Coyne 1994:68)." What is the purpose of emulating everyday reality? Coyne's scepticism about the truth of experiencing the duplicate is a criticism of the supposition that an understanding of the world and our place in it can be accomplished by considering simple parts as constitutive of complex wholes. The popularity of this philosophy means that its subjectivity can go unnoticed. The realism of perspective, for example, is only obvious to those educated to see it as realistic, the post-Renaissance Western mind.

On the other hand, the constructivist view affirms that our perceptions are essentially constructed. We rely primarily on simple cues and clues from the environment, suggesting that "*...computerized simulators are effective because the users are immersed in their task and in the culture in which thesimulation experience makes sense "* (Coyne 1994:66).

Richard Coyne draws from James Gibson (Coyne 1994:66) when he describes the interdependency between an organism and its environment as so extensive that one cannot be understood without the other, and that if one is described or understood then so is the other. *"Ignoring the constructed nature of perception suggests that a virtual reality system for a frog would be little different from one for a human "* (Coyne 1995:183). We are "educated" by our environment and when confronted with something new engage with it to construct a perception.

"*Virtual reality technology does not have to strive for realism through better and more complete sensory input* " (Coyne 1994:66). Rather, realism is something which has to be learnt, and representation is a cultural phenomenon. The learning process is prioritized over any theory of correspondence: the model makes sense through our immersion in the context.

The attempt to represent truth using the data-oriented approach ignores the relationship between the viewer and their environment. Within Gibson's ecological view of perception the interdependence of an organism and its environment is crucial to the existence and definition of either. These are enmeshed (Coyne 1994:66 cites Gibson).

The constructivist view of virtual reality design that the "*appreciation of "realism" has to be learned* (Coyne 1994:67)" follows Heidegger in prioritising practice over any theory of correspondence. The learning occurs within a context of particular practices, while one becomes part of the appreciative community. The constructivist approach is therefore limited to members of the community: those knowledgeable of the practices.

Metaphor has been suggested as a model for interactive and Virtual Reality design (Coyne 1995:250, Nelson 1990:239, Erickson 1990:65). A good metaphor can greatly enhance the interactive experience. As well as elevating the role of the imagination and body in design, the well-thought out, unifying metaphor will provide ongoing common ground between the world of computer user and programmer. Through familiar and recognisable objects as opposed to esoteric commands and formal logic (Coyne 1995:250) a good metaphor can accelerate learning and problem-solving processes as well as suggesting new avenues for technological development.

Using metaphor in design is not necessarily to the exclusion of either the correspondence or constructivist approaches of virtual reality design. A metaphor is not reliant on a large amount of data and builds on previous experience to accelerate immersion. As such, it is limited to those who are familiar with it. Interactive design using metaphor is pursued in chapter 3.

CHAPTER II

2.1 Introduction to Place in Cyberspace

An examination of place (meaningful space) as constructed in architecture can direct meaningful spatial metaphor in cyberspace design.

The properties an architectural design metaphor can offer its design is discussed in the next chapter, while this chapter focuses on a philosophical look at 'cyberplace', locating the difficulties users have orienting themselves in cyberspace and identifying with it. These difficulties and other design restrictions will subsequently be examined.

2.2 Why Look for Meaningful Cyberspace?

Heidegger argues there are two ways of being *in* the world. He distinguishes between *'in'* as *inclusion*, such as being (located) in a container; and as *involvement*, being in love, being in business. This latter description is the primordial (basic) experience of being involved and thoroughly engaged in making and doing (Coyne 1995:165). This description of *being_in_the_world* describes involvement without presuming differentiation between the self and the world: *undifferentiated involvement* (Coyne 1995:168).

Place is more than a geographical location. Meaningful space is where a person can *dwell* or *be_in_the_world* in a deeper sense than, for example, as described by socio-economic conditions or scientific understanding. *"The place is the concrete manifestation of man's* [sic] *dwelling and his identity depends on his belonging to places* (Norberg-Schultz :5-6)"

Place has character and space (Norberg-Schultz :5). Character is the atmosphere of a place. All places have character (festive, solemn, protective, barren, fertile). Space, as we shall see in chapters four and five, is described as gradients of inside and outside (in terms of enclosure & centrality, direction and rhythm) and through movement (chapter 6).

Essential to meaningful experience (of place) is to dwell in an environment where one can *orientate* oneself within it (know where one is) and *identify* oneself with it (how one is in a certain place, with an environment, such as the feeling of belonging in urban scapes, recently substituted with feelings of alienation.) We can therefore define cyberplace as a virtual space for dwelling, for primordial being. Distinctive in its atmosphere, it does not already exist and must be constructed.

2.3 The Difficulties of Designing Place in Cyberspace

As the constructivist design of Virtual Reality acknowledges that "realism" must be learnt, favouring practice over the recognition of models of representation, undifferentiated involvement likewise focuses on interaction, or doing.

As discussed in chapter 1, the reductive nature of the data-oriented approach to designing cyberspace erases irregularity. Coyne argues that the nature of ordinary things lies not simply in a collection of properties but also in the irregularities of experiencing them (Coyne 1994:68-69). *Differentiation*, where irregularity manifests, is argued as primary to *being* in the ontological sense. But when similarity is used as categorisation (as in scientific thinking), difference is demoted.

Nevertheless we attempt to move towards *ontological cyberworlds*; cyberspace as a context of total and undifferentiated involvement, *being_in_the_world*, as in the everyday involvement in tools and practices; and not cyberspace as a set of entities (Coyne 1995:168).

2.3.1 Context

Without realworld conditions such as the horizon and gravity, boundaries and weather, cyberspace has only the features we invest it with (Benedikt in Campbell 1996:Ch.2 p.1).

Technical constraints always affect design. Guidance by constraint can also come from the socio-cultural context in which a design is developed (Campbell 1996:Ch.2 p.1).

Cyberspace is described by Campbell (1996:Ch.2 p.1) as "*the context of abstract, infinite space*". Initially homogenous, with no features but those that we give it, it can be difficult to place

oneself within it. Sir Thomas Livingston Mitchell, Major Mitchell Surveyor General of N.S.W. (1827-1855) encountered the difficulty of finding the hills or mountains which would support his surveying strategy. The aim was to *"arrange geographical objects significantly, 'to centralise features, to compose them into regions.' For Mitchell the survey was a strategy for translating space into a conceivable object, that is, triangular or bounded space, an object that the mind could possess"* (Calzini 1999:97).

Where mountains or hills could not be found, then, they were invented. 'Mounts', documented in his journals, were a necessary strategy for his idea of landscape to become visible (Calzini 1999:97).

Essential to engendering (and experiencing) place is *orientation* and *identification*: orienting oneself within a context and identifying with and anchoring within that context.

The following issues address issues of context in cyberspace, seeking qualities which may elucidate cyberplace.

2.3.2 Navigation

Navigation is integral to orientation. Lack of *direction*, for example, means the user will get lost easily. The lack of physical constraints is freedom with a price, as cyberspace *".. lacks the very qualities of real [material] space...sun or horizon..gravity or resistance of objects... that our body use to navigate it"* (Anders p.3).

2.3.3 Boundaries

Heidegger notes in his essay of 1954, "Building, Dwelling, Thinking," *"a boundary is not that at which something stops, but, as the Greeks recognized, the boundary is that from which something begins its presencing* [and that] *"... being" can only take place in a domain that is clearly bounded "* (Frampton 1983:24). Boundary informs differentiation and movement.

Boundaries can be cultural constructions and as such can form cultural spaces. They also move between and across cultures. The Yeundumu doors of a primary school in the Aboriginal community of Yeundumu in Alice Springs were painted by aboriginal elders with designs depicting Dreaming stories (Warlukurlangu Artists 1987). The threshold of the doors

describe a superimposition of cultures: geographical and philosophical orders of the Dreaming and the Western pedagogic order of school buildings (Calzini 1999:100). This superimposition manifests the cultural difference at the boundary's perforation: a metaphoric space for cultural mediation?

Boundaries and their openings can enable and constrain human movement.

Media and new technologies (eg telephones, surveillance cameras) override physical boundaries and impose new ones (Meyrowitz 1985:308). The onset of Modernism in architecture replaced the heavy facade organised to reflect and reinforce social hierarchies with transparency of material and design, reflecting desire for a more egalitarian society. The dissolution of physical boundaries did not have the social impact it was first thought it may. Murray (1992:64) writes that the "*function of the door in regulating social contacts has been replaced by the answering machine.*"

Networking technology also filters access. A directory may be made available to a select few while 'rooms' in a Multi User Dungeon (MUD) may likewise only be accessed by selected users.

Change in boundaries changes the space. When a telephone conversation in a living room is superimposed on a physical conversation the dynamic of the space will change to reflect the greater intimacy of the telephone conversation (Coyne 1995:156). The telephone conversation will itself become more intimate when others are physically present.

A lack of boundaries means that there is a lack of contrast, differentiation, between in- and out-of-bounds. There is no dialogue.

2.3.4 Body, Distance and Time.

> "*On the terminal's screen, a span of time becomes both the surface and the support of inscription; time, literally ...surfaces. Due to the cathode - ray tube's imperceptible substance, the dimensions of space become inseparable from their speed of transmission. With the advent of instantaneous communications (satellite, TV, fibre optics, telematics) arrival supplants departure without necessarily having to depart...* " (Virilio 1986, in Thomson 1994:58).

Grosz (1992:251-252) argues similarly that depth and distance have collapsed into (the screen's) surface and the reduction of space to time has resulted in disembodiment.

Not only is corporeality dependent on space and time, the framework of space and time requires the corporeal for their comprehension (Grosz 1992, in Thomson 1994:66).

Novak describes the resulting condition of being with the term *"pantopicon"*, *"..the condition of being in all places at one time"*. (This is different from the 'panopticon' prison model). For networked users the replacement of material distance by time results in an *"unparalleled, if disincarnate, proximity"* (Novak p.1). The unique situation arising from an inability to locate oneself in any one cyberspace is similar to the accessibility of all cyberspaces in that one remains nowhere in particular, *"in no place* " (Coyne 1995:157).

The dissolution and ephemeral nature of cyberspace implies an intangible context, continually changing in nature. Movement between locations need not be continuous (Campbell ch.1 p.5) as one 'arrives' at any location instantly, collapsing time and space into an instant.

As distance ceases to be a relevant measurement of travel, speed also becomes meaningless.

Identification of a disembodied subject with an ephemeral context is dependent on the representation of the subject. Amongst issues of resolution in the data-oriented approach to design, the lack of *inherent size* of an avatar problematises his/her/its identification with the 'environment' or involvement in it.

2.3.5 Differentiation

Undifferentiated involvement is involvement without presuming differentiation between an entity and the environment, *"..the transparent and unreflective use of equipment, as in the habitual use of a computer keyboard or a telephone "* (1995:168). These tools only enter our awareness when they break down, or when we point them out: *"..being in the world is ...undifferentiated involvement. Things are disclosed through breakdown in a particular situation (as when something is amiss in our habitual use of tools) "* (Coyne 1994:68).

Richard Coyne (1994:68) writes of *being_in_the_world*:

"...The idea of virtual reality is the opposite: everything in the field of view is presented to the senses...a world without differentiation-pulling us in every direction at once."

Lack of depth gradients in the field of view contributes to the lack of differentiation. In the physical world depth includes the continuum of saturation in the colour of the sky as we approach the horizon; the continuum of large to small that we associate with proximity; of fine to coarse; light to shade; and of a decrease in quality of vision as we approach our retinal limits (Gibson in Coyne 1994:66).

These qualities of physical environments allow us to orientate ourselves and identify ourselves relative to an environment: orientation relative to the sun or inferring the atmosphere of a space from changes in light. Lack of gradients contributes to the sense of homogeous space.

2.3.6 Timelessness

Relph writes that places are present expressions of past experiences and events and of future hopes: The *"..experience of place is of flux or of continuity, therefore time must feature"* (Relph 1976:33). Where there is no time except for direct experience, little tradition and no awareness of history there is place independent of time: a scarcely changing, overwhelming present. The complete erasure of data in the digital realm without leaving a trace is the erasure of time, as history does not build up in the environment except through memory.

These points describe some difficulties users have in *orienting* themselves in a cyberspace and *identifying* with it. An invetigation of user difficulites with*in* cyberspace and Virtual Reality is necessary for the development of a programme of requirements towards a design solution.

CHAPTER III

3.1 Introduction to Architectural Metaphor

Peter Anders describes the underlying logic of spatial metaphors within computing asbeing like applying knowledge gained as children. Through the navigation of space we have learnt about relationships and hierarchy. Similarly navigation of information as space allows us to intuit rather than rationalise routes and strategies. (Anders p.1)

Orientation can combine with rational design to approximate this intuitive negotiation. Anders cites Meyer Kress's experiment where four identical boxes with different labels are placed in a featureless room. Entering a box reveals four more identical boxes, and within each of these again four more boxes identical to the first, and so on. Rational design alone is not enough: *"...While this nesting of volumes seems rational, the user gets lost within the first few iterations "* (Gottfried Meyer Kress in Anders p.1).

Anders argues orientation can be effected through design based on an urban form of architecture, the city. *"The architectural metaphor of cyberspace validates the designer's work: just as spatial cues help to orient us in real building, they also offer a visual structure for abstract information, revealing relationships and hierarchy "*(Anders1994:78-81 in Campbell p.3).

The *formal structure* of architecture, especially, makes urban space navigable. Other qualities which assist orientation include variety, *landmarks* and *transition spaces* such as windows and doorways to connect spaces. These will also be addressed in the ensuing chapter.

3.2 Metaphor

> "*Metaphor is the rule* [of everyday experience] *rather than the exception. A metaphor is an invisible web of terms and associations that underlies the way we speak and think about a concept. It is this extended structure that makes metaphor such a powerful and essential part of thinking. Metaphors function as natural models, allowing us to take our knowledge of familiar, concrete objects and experiences and use it to give structure to more abstract concepts* " (Erickson 1990:66).

Metaphor in interface design is not new. Apple Macintosh computer systems has taught designers and users much about desktop metaphor design. A metaphor "*..has the potential to elevate the role of the imagination in design...*" and implicates the body: the 'point and click' metaphor imaginatively conveys 'touching and grasping' (Coyne 1995:250). Interface metaphors need not use icons or graphics (Erickson 1990:66).

Metaphors have limits and can break down. The better the metaphor the more stable it will be under varying conditions. Erickson describes the interesting example where the voicemail metaphor breaks down: A visitor arrives and as arranged, phones from the lobby to announce her arrival. The protagonist has stepped away from his desk so the voicemail answers: "I'm not here now. But if you leave a message after the beep, I'll get right back to you." She leaves a message but he only receives thirty minutes later. He waited upstairs and she waited downstairs for half an hour, neither realising the breakdown in the system. The difficulty here is not with the technology, rather with the metaphor. He is not '*here*'. Both his answering message and hers are located on a server somewhere else entirely. Due to heavy usage at that time, the message server was only able to relay the message after half an hour. Had the service been understood as an answering service, perhaps through a different message ("*Tom's not at his desk. If you leave a message after the beep, I'll forward it to him.*") the breakdown may have been noticed or at least suspected (Erickson 1990:67).

3.3 A Method for Generating Metaphors

Though the process of generating metaphor will be only partially followed in this paper, a broad outline of Erickson's (1990:68-73) methodology follows.

3.3.1 Functional Definition

Here an understanding of the system being modelled is pursued. This entails its functionality, the functionality available to the user and the speed of execution. Familiarity with specifications and experimentation with the system is involved.

A functional definition of immersive cyberspace is included the discussion on the nature of cyberspace in chapter 1 of this paper. The limitations of the medium in effecting cyberplace is discussed in section 2.3.

3.3.2 Identify User Difficulties

What are the users' difficulties? What is new, looks familiar but is new?

Erickson advises consultation with users at this stage: user observation, communication about the function and experimentation with prototypes to determine what users do and do not understand about the functionality. User difficulties with orienting and identifying within cyberspace is discussed in chapter 2.

3.3.3 Metaphor Generation

Just as metaphors 'pepper' language, they will 'litter' any problem description or design brief. After developing a functional definition and identifying user's problems with the model it is necessary to identify metaphors within the problem description, as these are often defined by technical people who are not representative of end users.

Focussing on the identified user problems (section 2.2) may then be followed by the location of "*..real-world events, objects, or institutions that embody some of the characteristics that users find difficult to understand. These make good candidates for new interface metaphors* " (Erickson 1990:68 -70). Mountford (1990:18-25) discusses the adoption of different genres to guide metaphor generation, including film, animation, theatre, architecture and industrial design.

Architects such as Novak and Campbell argue that "*..placing the human within the information space ... is an architectural problem*" (Novak 1990:226 in Campbell p.1). Mountford agrees that architecture and interface design have the common goal of creating livable, workable, attractive environments while meeting a programme of constraints/requirements where a designer will manage trade-offs between conflicting requirements. Depending on the relative emphasis placed on different requirements, alternative solutions will be generated (Mountford 1990:21-22.).

3.3.4 Evaluating Interface Metaphors

Erickson proposes five questions for the evaluation of the metaphors generated (Erickson 1990).

1.How much structure does the metaphor provide?

If it is not very informative about the nature of the function then it is probably not very useful.

2.The applicability of the structure.

A metaphor may have irrelevant parts, but it may also have misleading features, such as the misleading nature of the voicemail message in the metaphor of 'here', or the use of the trash can metaphor for ejecting disks on a Macintosh desktop.

3.Representability

The ease of representation; the distinctiveness of the visual and auditory representation ideally accompanied by specific, associated words are assessed.

4.Suitability to audience

Audience understanding of the metaphor is more easily achieved when maintaining a process of user consultation. It could be argued, however, that user understanding of the metaphor is not vital and that consistency in its use may be enough for comprehension.

5.Extensibility

What else will be gained through this metaphor? Users may follow the metaphor to deviate from the initially thought ways of using the function, dwelling in doorways to gain insight into what is "on both sides of the door", or the metaphor may have the potential to extend: designing a desktop like a house would

lend itself to seeing other networked users as neighbours. "*A metaphor may have additional bits of structure that may be useful later on* " (Erickson 1990:72).

A meaningful experience of cyberspace, where the user knows where and how they are in a space may be engendered through the use of an architectural metaphor. When a metaphor has been chosen and developed it is necessary to apply as much of its structure as possible and to make full use of its representations. As was demonstrated in the voicemail example, the details are essential.

CHAPTER IV

4.1 Introduction to Architectural Design for Virtual Reality Design

Recall that the spatial metaphor is useful as an understanding of space is a human condition (Anders p.1).

Many cues of the built environment are culturally specific and when abstracted into metaphor for virtual reality design may be misleading to those not familiar with the culture. However, the essentials of the built form and natural world include common and familiar features (doors, floors and roof forms; the horizon, up and down and gravity) which make the architectural metaphor viable and, as will be discussed, easily representable.

Architectural metaphor can also offer a virtual reality design praxis enabling better design, orientation and identification.

Constructed architectural place is the quality that this chapter will attempt to idealise into metaphor, for application in cyberspace. Samples of an architectural design methodology and extensions of it will be discussed below.

4.2 What is Architecture?

Ching defines architecture as "*..the making of a place by the ordering and definition of meaningful space, as developed in response to a need or program* " (Ching 1979:10 in Campbell p.1). Campbell adds that it is also a spatial expression of a culture or society, where this expression may be physical or virtual.

The programme details a brief of requirements and constraining factors. In physical architecture the programme may be a roof and walls for shelter from the elements of wind, rain and sun. In cyberspace these elements do not exist but technical constraints such as limited information processing for real-time interaction would be included.

4.2.1 Architecture as Place

The existential purpose of building, argues Christian Norberg-Schultz, is to

> "*make a site become a place, to uncover meanings potentially present in the given environment. This elucidation of meaning reflects humanity's understanding of the natural environment and his* [sic] *existential situation in general, necessary to engender dwelling* " (Norberg-Schultz :50).

Place is informed by distinct character and space (Norberg-Schultz :5). As described in chapter 2, the character of a place is its atmosphere. As light changes throughout the day and seasons it reflects the changes of time on place (Norberg-Schultz :50).

Place is qualitative space (Relph 1976:26). Integral to the question of constructing meaningful space is the nature of the space being ordered and defined.

4.2.2 What is Material Space in Architecture?

While Newton maintained a flat, even and absolute space, Einstein's general theory of relativity shows space to be curved by gravity at whatever scale, with motion and direction due to continual expansion from the beginning of space-time: the big bang (Wertheim 1999:172). Thus matter shapes space.

Similarly Norberg-Schultz defines space qualitatively, progressing through degrees of enclosure.

In looking beyond a spatial representation of reductive abstraction to either the three-dimensional organisation of elements that make up a space or the geometry within the perceptual field, Norberg-Schultz coins 'concrete space' the original, "*intuitive three dimensional totality of everyday experience* " (Norberg-Schultz :).

Concrete space is described in terms of inside and outside with varying degrees of extension and enclosure. An *enclosure reads as a figure* in an *extended landscape* and may provide a *centre* or focus for its surroundings from which space extends with a varying degree of continuity (*rhythm*) in different *directions*, such as the vertical direction toward heaven and the horizontal direction of the earth.

Enclosure is said to be defined by *boundary*, and the boundary's enclosing properties are to a large degree determined by its openings. Kevin Murray writes "*..a door is a frame for conceptualising how inside relates to outside* " (Murray 1992:53).

4.3 The Dialogue

Programme, site and form are poetically blended into a meaningful, understandable and to some extent unique dialogue (Campbell) (Lukerman 1964 in Relph 1976:3). The dialogue inspires and directs design decisions of all things from circulation, destinations, boundaries, transitions and form, through to detailing. When the roof structure of a building is echoed in the detailing, it is usually a manifestation of a dialogue. Similarly, a mutual relationship between internal and external spaces can be the result of an integrated, conceptual structure. The dialogue directs design on a supreme level and can provide an integrated whole, engendering better orientation and integration of the individual with the environment.

The following points are relevant to the construction of dialogue.

4.3.1 Meaning

Our beliefs underlie our acts and give character to a place. Consequently the characterisation of a place by our beliefs is important is establishing significant representations of cultures or societies (Luckerman 1964 in Relph 1976:3).

4.3.2 Order

A dialogue may manifest in an ordering of elements, where clear connections and hierarchy organise information or data sets.

An order may feature symmetry. It is often a grid or radial plan, but may correspond to more interesting forms of symmetry as well as clustering or other geometric arrangement. Design/understanding of the order is a grounding for developing and understanding relationships between elements and their hierarchy (Campbell ch.2 p.1). Orientation follows.

4.3.2.1 Grid

"*The conceptual and regular placement of forms and spaces in a rhythm or regular pattern* " (Campbell ch.2 p.1). In his paper "The Renewed Novelty of Symmetry", Greg Lynn describes an ordering system which evolves; a symmetry of mutated responses to context.

4.3.2.2 Landmarks

Landmarks "*...are the variations in the pattern which serve as unique elements or points of reference by which to orient oneself in architecture.*" *Variety* or *novelty* can inform both orientation and identification by breaking homogeneity. *Direction* can be inferred from association with landmarks.

Integral to landmarks is their *imageability*. A remarkable landmark (size, form association, significance) will possess a high imageability and clarity (Relph 1976:32).

4.4 How can the Metaphor of Architectural Design Practice apply to the Design of Cybersplace?

Norman criticises interface design as it generally commences with the question of the interface rather than the question of "What tools should be provided for the task?(Norman 1990:217)". This metaphor of architectural praxis places a similar emphasis, where solutions are arrived at through a process of investigating the programme and generating solutions specific to the programme and site.

The design and inhabitation of cyberplace was discussed in section 2.3 as problematic. Following is a set of representations and structures which aim to address these issues. Based on a metaphor of dialogue in architecture for cyberspace design and inhabitance, these responses serve to extend the structure of this metaphor.

4.4.1 Orientation

4.4.1.1 Navigation

Navigation as moving is proposed by Campbell as depending on cognitive maps, degrees of freedom and a combination of environmental cues and tools.

4.4.1.2 Cognitive Maps

A cognitive map permits *"way-finding, the dynamic process of using our spatial ability and navigational awareness of an environment to reach a desired destination."*

Orientation and freedom of *navigation* in design is essential to the development of such a map. *"To develop a cognitive map in an unfamiliar, informational, and spatial environment, one must be able to orient and navigate intuitively"* (Benedikt in Campbell ch.2 p.1).

Arrival and departure can introduce and close a position or a context. By providing a "God's eye" view of the structure one can generate this context and initiate cognitive map generation.

4.4.1.3 Degrees of Freedom

Whereas the navigation of architecture in the physical world is constrained to 3 degrees of freedom (along the x and z plane parallel to the earth and around the y axis in the vertical) in cyberspace six degrees of freedom are possible (rotation about x, y, z and movement along x-z plane, x-y plane, z-y plane). The floating sensation that this permits is unfamiliar and potentially disorienting. It could be addressed by extending the metaphor (eg to 'floating' inside a vessel such as ship as an extension of an urban architectural metaphor) or constraining the functionality to the more familiar three degrees.

4.4.1.4 Environmental and Other Cues

This may include signage, symbols and architectural elements as well as less culturally specific but also less intuitive aids such as maps or compasses (Campbell ch.5 p.1).

4.4.1.5 Depth

Though cyberspaces use the Cartesian model of reality where the size of an entity *attenuates* with the virtual distance from the beholder, the physical world is far more sophisticated.

The attenuation of *clarity* to promote depth in 3D cyberspace is achievable through metaphors of fog, a decrease of saturation colour towards the horizon, dropping detail with distances.

Depth is effected through asymmetry, as it engenders movement (Zevi 1978:20).

4.4.1.6 Speed and Movement

Symmetry is argued by Organicist architect Zevi as passive and static. In describing an architecture of time he advocates the diagonal as inspiring movement. Where symmetrical organisation requires only a static viewpoint, the eye movement is encouraged by an asymmetric composition of space and form because the only way to perceive the whole is to move through it. Motion in cyberspace is useful for browsing and exploration and can be better formed through deliberate design towards it, through asymmetry.

When cyberspace users are given

> "*.. the choice between travelling cybereal highways to the MUD and flashing into the facility, usually do the latter...Speed, a necessity in real [physical] space, is simply a blurred condition between states. The users don't engage the information until things slow up and they can examine the destination*" (Anders p.3).

As described above, the immediate arrival or departure symptomatic of instantaneous movement can be disconcerting. The metaphor of the hyperlink or wormhole has, however, served people familiar with hypertext well and it is now rarely noticed as being incongruent with the physical world.

The negotiation of physical space involves movement. Arrival and departure can be considered as bookends to a movement of this negotiation (space and time). The negotiation of cyberspace is a *disembodied* traversal of virtual space and time.

Within immersive systems such as the Wedge or the CAVE the whole body is interfacing, and travelling physical distances within the inferred cube (an approximate maximum of 3 metres). Virtual distance and speed are more effective within immersive than within desktop environments because the utilisation of perspective within stereoscopic vision provides a stronger, more familiar metaphor for experience, a metaphor based on the experience of the whole *body*.

Perhaps similar is the experience of moving between the recollection of childhood and recent *memories* - also a negotiation of virtual times and places.

"*Motion between memories is usually not continuous and there is often no distance involved. Using this model for cyberspace would have distinct advantages. Getting lost there would be less a problem than in reality, since you could simply revert to a previous state. A real space example would be the recovery of lost keys by remembering the events that followed their last use. Examining the memory states reveals the physical location of the key-ring*" (Anders p.2).

4.4.2 Identification

4.4.2.1 Scale

When browsing three dimensional navigable cyberspaces (such as Virtual Reality Modelling Language, VRML, mostly for internet browsers and immersive CAVE systems) scale can be informed by the *speed* of movement and the need to slow down to fit through openings. The size of an opening can therefore inform scale, as does *detail* (Campbell ch.5 p.1).

VRML uses level of detail nodes to organise models of the same entity at different resolutions. High detail models are located in close p roximity to the user while lower detail models will replace these as the user moves away and less detail is required.

4.4.2.2 Formal and Abstract Structures

To find site or reference points against which a cyber-experience may be anchored *socio-cultural contexts* for cultural conventions (Anders p.3) can be considered. Relating to other things and places helps to establish the idea of a location (Luckerman 1964 in Relph 1976:3).

4.4.2.3 Localisation

Luckerman is cited by Relph as describing the importance of place as a focus or several foci within a larger area or context (Luckerman 1964 in Relph 1976:3).

4.4.2.4 Time

Whether emerging or becoming, place should express the continuity of time. Heidegger advises an unselfconscious space making, where it is not an object 'to be moulded' but rather organic and evolving from the act of building or modification (Relph 1976:18).

Continuity of space can be achieved through the use of time. Zevi describes the De Stijl procedure of removing the perspective block by removing the third dimension - to decompose the volume into panels - and thus activating the spaces into one space *continuum* and consequently time.

> "*Once the box has been dismembered, the places no longer form closed volumes, containers of finite spaces. Instead the rooms become fluid and join up and flow in a moving continuum...a dynamic vision, with the element of time... a fourth dimension*" (Zevi 1978:26).

Ritual and memory can effect character within a space to create place " *..through repeated encounters and complex associations..place experiences are necessarily time deepened and memory qualified* " (Relph 1976:26).

4.4.2.5 Ritual

Ritual, custom and mythology deliberately or incidentally strengthen attachment to a place by reaffirming sanctity and unchanging significance of it, and the enduring relationships between people and a place (Relph 1976:33). A metaphor of architecture could be extended into an appropriate metaphor of ritual practice to increase a sense of belonging and identification with a space (increasing the sense of place) through the meaningful familiarity of an action.

4.4.2.6 Community

Coyne describes cyberspace as a 'world of community' where the community appears to 'live' in the medium. "*Take away the medium and the community disappears* (Rheingold in Coyne 1996:153)". Within conventional computing, networked cyberspaces often establish communities revolving around special interests, residing in and dependent on the medium: in bulletin boards, newsgroups, VRML worlds allowing multiple

users and chat lines.

As Relph notes, community and place reinforce each other's identity (Relph 1976:53). Landscape can be "*..organised to reflect communally held ideas, generating messages and symbols to unite the community and clarify roles and friendships which then serve to maintain 'a collectively conditioned place consciousness*" (Aldo van Eyck in Relph 1976:32).

Community in networked immersive cyberspace follows naturally, enhancing the sense of being somewhere, of belonging, of *identification*.

An architectural design praxis which emphasises existential space, ie place, is very relevant to the design of 'cyberplace'. The metaphor of architectural design praxis can thus help to effect cyberplace.

CHAPTER V

5.1 Introduction to the Space of Virtuality

An understanding of the theory of virtuality provides insight into the nature of space - material space, cyberspace and the overarching *space of virtuality*. *Space of virtuality* is described in this chapter through a discussion of the theory of virtuality.

An understanding of the space of virtuality directs the key concept: *movement*, discussed in the following chapter.

5.2 What is the Theory of Virtuality?

5.2.1 Introduction to the Theory of Virtuality

The virtual is

"real without being actual, ideal without being abstract " (Rachjman 1997:20.6).

The idea of the virtual is quite old. The word derives from the Latin 'virtus', meaning 'potential' or 'force' (Rachjman 1997:20.6). When speaking of virtual reality or cyberspace, it is often as relative to material reality. In common usage, 'virtually there' is the lack of not being (materially) there. Aristotle couples the virtual with the actual and describes the latter as *"that through which the potential or force becomes at once visible and effective"* (Aristotle in Rachjman 1997:20.6).

Philosophers of a theory of virtuality such as Bergson and Deleuze have claimed the term to describe something different.

Deleuze writes: *"To actualize the virtual is not the same as to realise the possible "* (Rachjman 1997:20.6). He is referring in part to the potential for change which the virtual holds; whatever the actual manifests and effectuates it will never completely show or activate all that the virtual implies. To be 'virtually there', then, is not less than being there, in a sense it is more, as it holds the potential of being in so many places. To be 'virtually there' is to be in one place which is many: the place which is potentially many places, rather than being in the one material reality.

"*the most virtual house is the most multiple* " (Rachjman 1997:20.6).

The idea of virtuality as *multiple potential* (Rachjman 1997:20.6) will be considered throughout this chapter as it pursues the notion of virtual space. Following is one of many different trajectories through the nature of virtuality.

5.2.2 Coexistence on the Continuum

Virtuality as *multiple potential* differs from the Aristotelian definition in the logic which it proposes. Where Aristotelian logic is based on identity (A / not-A) and difference (A / B), the logic of virtuality describes the coexistence of dualities on a continuum (A / not-A are indeterminate neighbours, spatially and temporally). In Deleuze's reading of Bergson's model of an actual particle surrounded by a fog of virtual imagery, we thus we find the simultaneous coexistence of the actual and the virtual. An actual particle, surrounded by a fog of virtualities, absorbs and emits virtual imagery circulating on circuits about it in the fog. Each virtuality is surrounded by a fog of higher order virtualities. The virtualities are continuously made and unmade, affected by their relationship with the actual particle. As this is an essential symbiotic relationship it follows that the nature of the actual particle is also indeterminate: it is a virtual particle, a virtuality (Deleuze 1997:19.6, Chatelet 1997:19.20).

As an actual entity is both virtual and actual, so the nature of space is both virtual and actual.

5.2.3 Qualitative Multiplicity

Virtuality is potential, so that when a virtual entity is actualised, manifested, it is different from that which it was (Deleuze 1997:19.6). When there is this continual emission of virtuality from actual, and actualisation of this emission, and again and again; with each iteration bearing out a portion of the potential, there is also a difference in kind between each iteration. The multiplicity in condition witnessed in point 5.2.2 above is qualitatively different with each iteration, with all manifestations and emissions of different kinds coexisting.

Bergson writes

> "*The multiplicity (or complexity) of the forces or potentials (virtuality) can never be reduced to a set of discrete elements or to the different parts of a closed or organic whole because the origins and outcomes of the potential cannot be specified independently of the open and necessarily incomplete series of their actualizations* "(Bergson in Rachjman 1997:20.6).

Here it is multiple in nature due to the potential for actualisation, whilst each actualisation/virtualisation is different in kind to the previous.

This demonstrates another startling quality of virtuality: it's qualitative multiplicity while remaining the quantitatively singular virtuality. Space can be similarly described as both virtual and actual, containing multiples of itself while being the one space.

5.2.4 Differentiation

As described above, the difference between the actual and the virtual is not discrete but continuous, where the qualities sit on a continuum.

The point of differentiation is in fact indeterminate, an interval smaller than the minimum thinkable (there is no perceivable boundary suddenly delineating the one from the other); and an attempt to discretise these into their individual identities results in the creation of yet another space of the same nature and dilemma: hence the interval.

Within the interval of continual actualization and virtualisation, a quality of virtuality can thus be said to differ from itself. Deleuze calls this *differentiation* (Grosz 1997:19.12).

5.2.5 Primordial Differential

Just as the time before time and time itself (and time after time) are said to co-exist due to indeterminacy of its nature, it is said to be "*both the birth and the fate of this time*", coined by Deleuze as the primordial differential (Grosz 1997:19.14).

The simultaneity of these conditions or multiples is described by "*..the coexistence of the past in the present, the anticipation of the present as the actualization of the past (in other words, the coexistence of two kinds of time, one frozen and virtual, the*

other dynamic and actual)." (Grosz 1997:19.14). Immanence, coexistence and qualitative multiplicity are essential to virtuality and the primordial differential. (Be)coming into being or non-being, the emergence of the present from the past is implicated. Likewise

> "*succession, the complication of the past, present, future...Each is necessarily involved in the function of the others, not by way of determinism... but through the divergence of the present from the past, and the future from the present, the interlocking of the past and the future (both virtual, both productive without emerging as such through the present) without the mediation of the present* "(Grosz 1996:19.14).

5.2.6 Expansion and Contraction

Like differentiation, the primordial differential is characterised by a movement of becoming. For Bergson, this becoming is the continual expansion and contraction (movement) of an entity's transition between virtual and actual conditions as described above. The becoming movement can thus be said to pre-empt, follow and co-exist with both space and time. Bergson writes

> "*...a certain habit of thought inverts the relations between space and objects, space and extension, to make it seems as if space precedes objects, when in fact space itself is produced through matter, extension and movement* "(Bergson 1950:206).

5.2.7 Duration

Duration is the time or space when and where one moves from the actual to the virtual, along their *continuum of difference.*

Moving through both time and space, undefined in start and end, multiple yet singular, continuous, it is an *interval of indeterminacy*:

> " *...a case of a "transition," of a "change", a becoming, but it is a becoming that endures, a change that is substance itself... two fundamental characteristics of duration; continuity and heterogeneity.*"

Duration is all that differentiates between pure present and pure past, pure perception and pure recollection, pure matter and pure memory (Bergson 1950). Duration contracts when matter extends, extending its contraction. Speaking of Bergsonism,

Deleuze concludes that *"..there is always extensity in duration and always duration in matter"* (Deleuze 1988:86-87).

5.2.8 The Possible and the Virtual

There is a difference between the possible and the virtual. The possible is a subset of the real: it is everything that the real is without being real. The virtual, however, is already real. Furthermore, the possible follows the real: only when something becomes real can one recognize all its possibilities.

The virtual, real potential is more multiple than the given identities of certain parameters and their (*instrumentalised*) possibilities. *"It does not take us from the specific to the generic. It increases possibility in another way: it mobilizes as yet unspecifiable singularities bringing them together in an indeterminate plan"* (Rachjman 1997:20.6).

5.3 The Space of Virtuality

Following the logic of virtuality, virtual space is a space of immanent becoming, continually differentiating from itself in its actual and virtual manifestations. These qualitatively different multiples follow duration to coexist in time and space on the singular continuum. The 'succession' of all of these qualities describes their interdependence.

Virtual space is a space of action, requiring and engendering movement as motion unfolds and actualizes space (Grosz 1997:19.13).

CHAPTER VI

6.1 Introduction to how movement activates meaningful space, in particular the space of virtuality.

The movement of becoming is integral to the beginning of time and space; the process of the actualisation of virtuality; the perception of matter (memory). Movement is essential to differentiation, multiplicity, to the continuum simultaneously containing degrees of difference (eg between actual and virtual states of an entity) of time and space.

Grosz (1997:19.13) writes of movement in space:

> "*A static perception of space results in (differentiation by) quantification, where space is not described in terms of quality, of difference and discontinuity.*"

A discussion of the role of time and movement within architectural design practice follows as *active virtual space,* both *creative* and *inhabited* is pursued. This covers the evolution from static to active space in western architectural space, from the Menhirs to Greg Lynn and Marcus Novak. The chapter and thesis will conclude with the virtually dynamic activation and simultaneous conception of space.

6.2.1 Introduction to movement in Western Architectural Space.

As was discussed in chapters 2 and 4, time in space assists the making of place. Here a look at movement in space will consider both kinds of time - the time of history and the time of the *emergence* of space (Deleuze).

Coexistence of past in the present is the movement of the interval, a movement of becoming. Following Bergson's model of expansion and contraction, memory is similar to becoming and ritual could be argued to effect place through spatial activation by memory.

A historical look at the use of time in architecture also reveals the importance of movement in effecting space. As is discussed in section 6.2, time in western architectural space has evolved from the static perception of space to its dynamic activation. This

evolution in movement in space is, however, constant in its *static* method of conception. Section 6.2.4 shows how architects such as Greg Lynn are designing in active spaces, using the temporal facilities of computer animation software as opposed to the statice nature of computer aided design packages and traditional drafting practices.

6.2.2 Movement in Material Space

Bruno Zevi, Italian architect and critic, elucidated "*space in time, space that is truly lived in, ready to act and be acted on*", as part of a code of a modern language of architecture (Zevi 1978:50).

It has taken humanity thousands of years to get to where it is now, of deliberate, continuous, multi-directional movement in material space. Virtual Reality has resulted in yet another change in our perception of space. Architectures in and of cyberspace are moving toward a state of continual becoming, and the activation of space through a closer integration of subject and environment than ever before.

Zevi describes an evolution from primitive humanity's conception of space as the figure in a landscape, the Menhir through to the closed space of the pyramids. These spaces are landmarks of meaning rather than spaces for inhabitation. "*They were empty, unfilled voids and left-over, negative cavities*" (Zevi 1978:49, see illustration ii).

The first interior space created by humanity is the Pantheon in Rome (27 B.C.; reconstructed 115-25 A.D.) (Zevi). A great dome with an eye at the top permits a view of the sky. The severe distinction between interior and exterior and the "*uniformly centralized* [space is] *without contrasts of light or shade.. limited by enormously massive walls*" (Zevi 1993:84) and engendering a static space, one which does not require movement in the viewer in order to experience it (see illustration i, ii.4).

The catacombs (illustrations ii, iii) are an example in the history of western architecture where one's movement *is* required in order to appreciate the space. Conceived as 'an architecture to move through' the Christian catacombs are meditative spaces which do not lead anywhere, rather they were metaphysical and transcendental (Zevi). Without destination or axis they engendered reflection on Christ, life and death through frescoes on the walls.

Hadrian's Villa and the Acropolis in Rome (illustrations ii.7, ii.8 respectively) are also described by Zevi as 'spaces to move through'. The rocky terrain at the Acropolis is apparent in the foreground of the image of the Parthenon, illustration iv; and influences the speed and quality of movement through the space.

Interplay between inner and outer spaces came about a few centuries later, in late antiquity. The Temple of Minerva Medica in Rome (260 - 68 A.D.) resulted from the Paleo Christian movement. The use of motifs and dark niches in the wall construction expand the space. Though movement of the person is not necessary to perceive this space it was a precursor to the interplay between inner and outer spaces actually forming and characterizing the spaces in which one is to move.

Zevi(1978:49, 1993:81) argues the one-directional movement along the length of the Christian basilica from narthex to napse resulted from the combination of the Biblical approach briefly apparent in the catacombs and the Greco-Roman sense of space, where an awareness of administrative and political authority is reflected by the symmetrical, classical organisation of columns and walls about a single, axial, motion line.

Only a thousand years later does Gothic architecture achieve the contrast between "*two lines of motion* " (Zevi). (See illustration i.11.) The length of the church is transversed physically and vertically towards the heavens. Continuous flow between inner and outer spaces was achieved through the architecture of the flying buttress which supports the roof. Walls, freed from their structural role are perforated with stained glass. Bleeding light from the outside in a dialogue between inside and outside ensues.

The Renaissance followed in the 15th century and brought perspective. A representation of depth through change in scale and deformation towards 'vanishing points' is oriented to a single point of view. Where one grasps the whole cavity from a single point of view the physical space is static. The only movement required for comprehension of the space represented is the mental shift to comprehend the illusion.

The use of symmetry also continued in the Renaissance, and as described in chapter 4, it is asymmetry (change) which encourages movement.

The Baroque period followed with a vengeance for the negation of obvious geometric patterns and formalistic canons. Theatrical effects, disorder, asymmetry and above all a plastic use of material and space utilised the technology of the Renaissance but rejected its rational form (Zevi 1993:136). The dynamic, multidirectional space is quite different in obliging the eye to move in order to perceive the dramatic superimpositions of visual forms that characterise Baroque space. Borromini utilised the ellipse, finding the tension between the foci to activate movement in the eye compared to the static nature of the circle. See illustration vi of the elliptical dome of S. Carlino alle Quattro Fontane (1640) in Rome.

Where Gothic dynamism's use of movement in two linear directions directs the eye along a surface or wall to maintain spatial continuity, in Baroque architecture "*..the whole wall undulates and bends to create a new spatial conception. Baroque movement is not a space achieved, but a process of achieving space; it represents space, volumetrics and decorative elements in action* " (Zevi 1993:136). Borromini's S. Carlino alle Quattro Fontane illustrates the juxtaposition and interpenetration of spatial figures resulting in fluid, active forms and space rather than "*a fixed prismatic or stereometric identity. It is virtually impossible to conceive the shape of S. Carlino from its plan* " (Zevi 1993:136-137). The relationship between elliptical dome and building is continuous: through plastic modelling of the wall structure the interpenetration of the spatial figures is accentuated.

Baroque artist Piranesi convincingly describes impossible spaces (Tanaka 1997:18). See illustration vi. His complex organisms originate in "*planimetried compositions whose dominating element is the randomness of the episodes, the lawless intertwining of superstructure, the undermining of the laws of perspective, so as to make nonexistent structures seem real* " (Vogt-Goknil in Tafuri 1987:26).

Modern space, with its open plan structure (columns replacing walls to free the space) re-evokes the Gothic desire for spatial continuity by making good use of new technology:

> "*Using vast windows, by now entire walls of glass, it has established complete continuity between interior and exterior space.*
>
> .. *Internal wall partitions which no longer serve static bearing functions may now be thin, curved, freely moveable... linking up interior spaces, joining together the numerous cubicles of the 19th century* " (Zevi 1993:141).

The Baroque experimentation with undulating walls and volumetric movement becomes directed by functional considerations. Manifesting in light, suspended partitions of glass which merge dining room and study, entry and living room, more light and 'room' results. Ideally, in Modern architecture the circulation routes direct the passage of light and form, rather than poetic vision as was the case in the Baroque.

The choreography of space in Modern architecture can be described through the movements of Formalism (from the 1880's onwards) and Organicism (1960's onwards)(Zevi 1993:143).

Examples of Formalist architecture, Le Corbusier's "Villa Savoye" and Organic architecture, Frank Lloyd Wright's "Falling Water" (illustrations vii and viii respectively) differ in manner of composition and consequently poetic approach.

Both feature continuous elastic space but vary in their schemes.

Villa Savoye's freedom of movement and space is within a precise stereometric scheme. Similarly Mies Van Der Rohe's Barcelona Pavilion features continuous space cut by vertical planes. These never form closed, geometrically static areas but create an uninterrupted flow in the succession of visual angles.

Wright, however, seeks spatial continuity in more and different ways. Instead of starting with a reticulated structure, an architectural volume, and creating within this, he worked 'inside out'. Wright commenced with the real interior space, projecting voids out from a central nucleus and thus defined the architectural volume. Functional in a more complex way, not only in utility and technics but also in terms of human psychology. This humanized architecture reflects the rise in modern psychology at that time.

Zevi writes:

> "*Organic space is rich with movement, directional invitation and illusions of perspective, lively and brilliant invention. (Wright) Its movement is original in that it does not aim at dazzling visual effects, but at expressing the action itself of man's life within it. The Organic Movement is not merely a current in taste or an anti-stereometric and anti-prismatic vision of space, but is aimed at creating spaces which are not only beautiful in themselves, but represent the organic life of the people who live in them*" (Zevi 1978:138).

Multiple virtual space is now directing avante garde architecture. A new understanding of the nature of space and movement and new technology has led to the escalation of the role of movement in architecture from the invisible to a parameter to a method.

6.2.3 Movement in Virtual Space

Greg Lynn writes that *"Historically architects have understood movement as the travel of a moving eye in space "* (Lynn "Formview" p.1).

Architecture has been designed statically : it is still conceived in a snapshot of time's space. Movement in architecture has for the most part been conceived as frozen in time. Greg Lynn is an architect who designs in time for space. Using computer animation software he designs through the moving section and animation.

Qualitative multiplicity of space is generated in Lynn's dynamic systems where he models the forces on the site using procedural animation software and interactively sculpts what will become material architecture, as the single family residence on Long Island in New York (Lynn 1996:97-98).

Novak's liquid architecture similarly generates its form from interaction. Continual interaction between user and architecture means continual formation of space. As the architecture changes to the desires of the user and the user responds a dialogue or place develops. Liquid architecture varies from user to user, point of view to point of view.

> *"A liquid architecture.. opens to welcome you and closes to defend you; it is an architecture without doors and hallways, where the next room is always where it needs to be and what it needs to be. It is an architecture that dances or pulsates, becomes tranquil or agitated. Liquid architecture makes cities, cities that change at the shift of a value, where visitors with different backgrounds see different landmarks, where neighbourhoods vary with ideas held in common, and evolve as the ideas mature or dissolve"* (Trans Terra Form p3).

However, as an architecture of place Campbell criticises Novak's unfamiliar forms as *"disorienting and distracting, becoming the focal point rather than the background environment for on-line interaction"* (Campbelll ch.1 p.3). Without the extended, deliberate differentiation and delineation which the transition of a hallway or door engenders, the space could become disorienting.

Furthermore, "*when everything we see may be unique*" as form orientates to our particular viewpoint, "*how would consensus or communication develop between disparate groups? "* (Anders p.2)". Community, reinforced by common form is then likewise subject to flux. The sense of place becomes fragile. Shopping malls exemplify an architecture whose form is continually erased and remade, an architecture without place (Thomson 1994). Novak's shifting between forms may parallel the flatness of the ever new (in defiance of time) and could similarly manifest an apoplexy of montage, an epilepsy of the surroundings. If this disorienting character of the space dominates other character (such as that inspired by a community of users) its structure will overwhelm being and dwelling.

The nature of the flux is therefore crucial. Where the presence of time and in turn meaningful place is dissipated by homogeneity, differentiation and temporal continuity in the nature of the flux are essential. Place is reliant on differentiation in the nature of the liquid transformation between the rooms. Change which leaves residue of the old would affirm meaning through the tactility of time: memory. Traces of the old are essential for recognition, orientation and consequently building on the cognitive map.

The 'liquid' metaphor may need some extension in that the structure of the liquidity, such as that governing the mapping of values to form, is not immediately clear. Clarity and consistency of structure of even the most abstract system of organisation can greatly assist orientation.

Novak's work has also come under scrutiny as an architecture of virtuality. Where the architecture of virtual space as opposed to actual space can be translated into the latter or something resembling it, it would be merely a possible thing, unrelated to virtuality as discussed above (Tanaka 1997:19). What is the nature of the difference between actual, literal liquid and liquid architecture? Does the metaphor preclude the virtuality?

Tanaka argues that Novak's emphasis on the freedom from material world constraints (Campbell , Tanaka) has simply resulted in increased formal variety and, consequently, arbitrary design: "*a strange kind of expressionistic formalism "* (Tanaka 1997:19).

The freedom of physical constraints is an arbitrary freedom, lying within the range of prediction. Jun Tanaka proposes instead to exhaust this arbitrary freedom, to use it up and deplete it of all its possibilities "*... seeking not freedom but the lack of freedom*" (Tanaka 1997:19). Following Deleuze, Tanaka argues that the violent differentiation of virtual architecture/space toward material architecture and space is similar to the effect of photography on architecture.

Deleuze describes the result of having completely used up all the possibilities as resulting in the image. The advent of mass media, photographs and other technologies of reproduction has changed 'reality' as the foundation of architecture. The image was the primary experience of architecture for architect Mies van der Rohe. His photographs of glass skyscrapers resulted from the exhaustion of all the architectural possibilities inherent in glass, and consequently the architecture becomes an *image* of intensity, no longer a representation of anything. These buildings were variations of an answer to the question the image posed. Tanaka (Tanaka 1997:18) writes of Mies van der Rohe that "*his glass skyscrapers tenaciously continue to hold fast to their virtual existence, remaining essentially different from the answers.*"

Similarly Le Corbusier found different answers to his architectural ideal *across* media. As well as producing photomontages he would 'touch up' photographs of his buildings to provide insight into his ideal. Each manifestation: building, montage, book, altered image; an actualisation, a different solution to the same virtual question. A virtual question which cannot be represented by a singular answer, whose solutions do not resemble this question or existence and which can only be hinted at from several directions.

The work of Baroque illustrator Piranesi is similarly virtual. His etchings are not "possible things". Instead they are described as "*a form of violence that exhausts the possibility of that kind of architecture. However, it is only when architectural thought is forced to do so by an irreconcilable question (as difference) that it is able to escape from the region of resemblance and identity*" (Tanaka 1997:19).

The exhaustion of possibilities of the built form can move exploration towards the logic of virtuality. Rather than resorting to "*naive formalism in their attempt to clothe virtual architecture in the cloak of reality* (Tanaka 1997:20)" it is the difference of the virtual to the material that will change architecture (just as photography changed architecture). Tanaka (Tanaka 1997:19) cites Stelarc's fusion of technology and body as an example of how the differentiation between technology and body can give insight into the nature of virtual space:

> "*In place of an easy to understand and easy to use interface it is the discordant nature of the computer with respect to the human body, that will provide a hint for differentiation.*"

The *physical, sensual,* and *erotic* contact of our bodies with electronic media has changed and will continue to change our material reality and ourselves, as the extension of the virtual into the material is visualising the material.

In the material world the self is subject to alteration. As the world changes, so does the self. To some extent it is becoming. In Novak's "3D Disembodied Dance" identity and place become liquid, directed and changeable. It is possible to project one's self into his synthetic world of liquid architecture, navigable music and habitable cinema.

> "*Since it is a defining characteristic of this world that everything can be changed, the Self itself becomes subject to alteration. Liquid architecture, navigable music and habitable theatre are about that world. Dance is about the being in the world. Disembodied dance is about becoming in the world. The Body without Organs. Identity now becomes liquid and navigable and habitable. Not only that, identity becomes possibly multiple and distributed. I can begin to have the sense that by distributing processes that modify my perceptions of the world, I can actually distribute my being. In the end the sum becomes not a single thing but a cluster which is scattered that can return sense information from distant locations. I can be at many places at one time, or at many times in one place.*" (Novak Trans Terra Form, p3)

The sense in which Novak considers the interrelationship between self and environment is not new. Architectural determinism exemplified in the panopticon (prison structure) has provided limited but accurate representation of this mutual definition between environment and inhabitants.

The new identity is an extension of the world. Inasmuch as the world is navigable, excessive of the single object in time in that it is a 3D habitable landscape or matrix; the informed identity is likewise. But when the identity *becomes* it differentiates and virtualises, informing the world. Though the world is based on our world, a limited metaphor of opportunity, it is *becoming*, inasmuch as different states, different places, identities and times are coexisting. Liquid architecture is similarly in a process of continual *becoming*.

The 'liquid' metaphor reinforces the nature of the interactivity. Liquid architecture could be said to differentiate its differentiation, multiply it: responding *by* the difference between beholder and architecture (across this interval) *to* the difference between successive states of the beholder's interests; affecting and effecting the initial difference, ad infinitum.

6.2.4 Active Space of Design

As described, Greg Lynn combines an architectural programme with *active space* to interactively and intuitively create a series of architectural solutions.

Using motion based systems within animation software (SGI Alias Wavefront) to model dynamic forces, urban scale and site issues are understood as patterns of movement(Lynn 1996:97-98).

Interacting force fields act on introduced objects, transforming them periodically. Once the equilibrium of the period has been reached, Lynn will stop the simulation and, in the Long Island house in New York, "*introduce a flexible prototype into this liquid digital force environment, opening its orientation and composition to influence, transformation and inflection* " (Lynn 1996:97-98).

Lynn visualises the dynamics of the space so as to model its variation. This translates to the built form for that location. Furthermore, the form reveals something about the environment in which it is situated. Heidegger's example of a bridge in relation to a river is relevant here.

> *"The bridge reveals the banks and the character of the river through the way in which the bridge is reflected in the water and the way the pylons have to be built to withstand the water's flow. By way of contrast a hydroelectric scheme appears to reveal "nothing of significance" about the river. The river becomes a potential to be exploited as an energy source"* (Coyne 1994:68).

Where the latter technology can be said to bring all things to the same level, telling us that the river is no different from coal, the bridge and Lynn's building (through his creative practice) differentiate the entities involved. Upon consideration, Lynn's Long Island home should disclose information about the spatial environment in which it is situated: differences between the space of the sea, road, neighbours, and so on.

Due to this integration of movement into conceptualising and forming space one could conclude that the relationship between internal and external space will be extensively informed by the movement around and in the site, as modelled digitally using particle systems. The overall differentiation of space which his method evokes in Cartesian space should inform the later intuitive stages of design.

6.3 Conclusion

Metaphor both drives new and enhances current Virtual Reality technology (Coyne 1994:71).

A design which is specific to the needs of the project and developed from them is imperative to a successful immersive experience.

Meaningful experience and place with recognisable, distinct character which is specific to a particular need/programme, can be deliberately constructed through the use of architectural metaphor. A metaphor of architectural praxis informs clear and consistent cyberplace design in the development of an integrated structure(Hennessey 1997:107). The construction of a dialogue between programme, site and issues specific to the project forms the skeleton which combines and informs design decisions. This is strengthened through the use of related spatial, architectural metaphors. As Erickson points out (Erickson 1990:69) , consultation with users and prototyping the project will add to the plausibility.

Re-uniting self and perception through grounding in a metaphorical context (metaphorical place) does not exclude the unpredictable. Metaphor can be used to find a truly virtual space. The difference between virtual reality and the metaphor through which the virtual reality is conceived will disclose virtual spaces and new metaphors (Coyne 1994:71).

Where the liquid in Novak's liquid architecture describes fluidity of form, indeterminacy of state and movement, it extends to inform a new space of liquid identity: the metaphor has combined with the technology to disclose and describe a new way of being.

Differences of metaphor could be used to map even the most multiple, unpredictable and virtual spaces. The degrees of difference between a metaphor and the virtual environment modelled after the metaphor could be argued as sitting on Novak's (Novak p.4) cyberspace-to-Virtual Reality continuum, as it parallels the continuum of differentiation.

Creation within these spaces can be similarly unpredictable and intuitive. Multiple, flexible solutions to a given set of parameters can be intuited.

Lynn's dynamic architectural modelling layers metaphorical energy fields to establish an active space for design, inspiring an equally dynamic and intuitive method for subsequently organising elements into similarly dynamic and flexible solutions.

Method and solution are the same: active, multiple and virtual.

The metaphor of architectural praxis and space can inform the design of virtual (architectural) space (material or cybereal) through the difference between architectural approach to material space and cyberspace. Whereas the architectural tradition sees *"movement in space as the movement of an eye in space "*(Lynn 'Formview'), Lynn conceptualises movement much more deeply. Instead of modelling in flat, homogenous space he uses movement to differentiate (virtualise) and actualise space.

Novak may locate the subject in duration. In a continual state of becoming, both subject and environment are indeterminate as their relative movements continually, rhythmically effect new spaces and movements. Keller (Keller 1995:ch.2p.3) describes a 'Time-Image' as the multiple, abstract composition which may initially appear impenetrable, but when a shift in perception occurs (as it may in listening to the compositions of Steve Reich, for example,) the simultaneous movement of becoming and being, effect and affect, induces a state of differentiation and undifferentiated involvement. The subject moves from plane to plane, memory to memory, past to present to past ad infinitum, along the composition. The work unfolds in unpredictable ways and echoes unity (Keller 1995:ch.2p.3).

Interactive, intuitive generation of solutions from the question of multiple potential is a matter of motion. With the advent of new virtual reality technology, time and space can be reconsidered as places for experience and creation. Metaphor can free the imagination and guide such intuitive investigations.

CHAPTER VII

PROGRAMME NOTES TO THE FOLIO

7.1 blue in the bluebird

6' 30"

computer animation loop on video for gallery installation 1999

sound: Tim Kreger

Prints (submitted on CDROM for Macintosh) and the animation '***blue in the bluebird***' are developed from earlier video ('***squarewaves***') and other sketches pursuing an essence of place, an essence of the open bushland, coastal areas, rainforests and inland lakes of Australia. '***blue in the bluebird***' is partially inspired by Australian poet Michael Dransfield's '*Geography*'.

The animation was installed at Strathnairn Gallery, Holt, ACT (25-30May 1999). The gallery's somewhat rural location evokes a sense of spaciousness very relevant to the nature of the work. The open bush and farmland also suited the focus on landscape prevalent in both'***blue in the bluebird***' and '***squarewaves***'.

The installed animation evokes a place in the darkness and features computer graphics imagery of birds in flight with abstract sculptural forms and textures guided by the conceptual development and dynamic computer modelling techniques.

The motion of the bird wings is modelled dynamically, by modelling forces such as gravity and wind currents which act on it. These forces deform the geometry of the wing over time. This draws on Greg Lynn's method of modelling in active space (chapter 6). By comparison, a traditional method would be to manipulate the geometry of the wing directly.

High end software Side Effects Houdini is the first software company to very recently make 'flocking' software available to the computer animator. Not without difficulties (bugs in collision detection, for example) it *does* prevent entities within a flock from interseting with each other *while* being directed as a group. The choreography of the flocks of birds in'***blue in the bluebird***'' is directed by the currents of the space (cyberspace) through which they are moving. These currents are forces derived from those forces used to model the soaring wing.

Thus the conceptual space is modelled in three dimensional computer space as forces which distort sculptural forms over time, likewise the forms distort the forces.

The currents of this cyberspace effect a cyberplace.

As well as describing and influencing the motion of the flock, the currents of this cyberplace also effect an abstract sculptural form with an elliptical section. The ellipse is significant in the tension between the focii, as used in the Baroque period (see chapter 5).

The gallery is included in the conceptual model as an empty black box. The projected image becomes a window through which to perceive the 'cyberplace' of flight.
The movement of Kreger's sound throughout the gallery space informs the sense that the room itself is a vantage point from which the 'cyberplace' of flight can be heard 'outside'. Sounds are associated with the visual forms. The rumble conveys the movement of the black box through the cyberplace while the wind is symbolic of flight as perceived by the flyer.

In cyberspace there is no gravity and soaring can become a metaphor for the exploration of a space. Here soaring also informs the nature of the space.

Installed at Strathnairn Gallery, Holt 25-30 May 1999.

For installation the image should be projected on a white wall in a darkened room. Use a SVHS player to drive a millions of colours video projector. A four speaker system and subwoofer are recommended, depending on the acoustics of the space (the subwoofer may only be neccessary where these diminish the bass).

3D computer animation is used in combination with digital compositing techniques. SGI Indy Workstations, SGI O2, SGI Onyx Reality Engine, Power Challenge supercomputer. Side Effects ICE and HOUDINI software. AVID ILLUSION compositing software.

7.2 'squarewaves'

3'

Landscape video study 1997

sound & collaboration: David Worrall

Who are Australians? After much consideration and discussion with David Worrall and Stuart Ramsden, the distinctive natural landscapes of Australia were pursued in an attempt to gain an understanding of Australian identity.

Viewed from a caucasian perspective, the landscape is treated as sensitively as possible to engender a human response to the work. The intension is to recall the relationship that Australians have (whether consciously or not) with our natural surroundings.

Digital compositing allowed me to pursue rhythmical dreamings of reflections in the trees, of the depths and contrasts of the rainforest and bush areas around Captain's Flat (ACT) and the bay area in the ACT. All the sounds in this work come from recordings of the Lyrebird's song.

SVHS and Hi-8 video cameras. AVID ILLUSION compositing software on the SGI platform.

7.3 'space for reflection'

6' 58"

computer animation on video 1996

sound: Wayne Kington

dancer: Lil Bean

An experiment in collaboration with a dancer and composer.

Proposal: An investigation into the place of the body in a work of art inevitably locates the space of the spectator.

The Spectator: A subjective entity or voyeur, who derives their existence from the objectification of an 'other'. The gaze of dissection (here perspective) strips away context.

The Episodic Structure: 3 Chapters provide the spectator with space for reflection. Episodes interrupt the reverie of voyeurism, reminding the spectator of their subjectivity.

The 3 chapters:

i of the horizon: The horizon is the line of reference back to the eye, relative to the subject it is the mirror reflecting the subject in the object, the 'one' in the 'other'.

dance of the orders:

Anthropormorphism in the language of architecture is portrayed through these four dances of the hierarchical, progressive orders of western architectural proportion (columns):

Tuscan: the most primitive, base, rising fresh from the earth.

Doric: the common foot soldier.

Ionic: the ionian woman, a lady of some estate.

Corinthian: The legend of a dead baby girl left in a basket has inspired artists and poets. Closer to transcendence in its mythological status and of the greatest status of these four orders the corinthian order allows for the most freedom and embellishment.

ever seen(:cut): The body as landscape dissected by Descarte's grid reflects a prevalent western attitude: one of disrespect to nature.

Video and 3D computer animation are used in combination with scanned imagery and compositing techniques.

SGI Indy Workstations, SVHS video camera. Interactive Effects: Amazon & Piranha software. Side Effects Prisms software. Integrated Video compositing software.

7.4 'cyclicommotion'

2'40"

computer animation and sound on video 1996

..OnceUponAtimelonectarhythmarbleedripearibridecayearcorporealmortalullabyrinthollowshadowindropsearcorrodecorangelicarcassupOnceUponAtime...

This work is based on a textual loop, a circular list of words that overlap resulting in the end of one word or phrase becoming the beginning or middle or even end of the next word. The cyclical nature of the text loop informed the content, ie the words. The images and sound were consequently derived.

The concept of time was chosen and interpreted holistically and cyclically: visually and acoustically investigating notions of the body, breath, pulse, life, the natural elements and the fruit that nourish our fragile bodies - fragile only when seen as seperate from the eternal cycle of life and decay.

Indian mouth percussion rhythms (counting) were explored and could be interpreted as marking the passage of time.

Still photography and video are used in combination with scanned imagery, 2D rotoscoping and other animation techniques and transitions.

SGI Indy Workstations, SVHS video camera, still camera. Interactive Effects: Amazon & Piranha software. Side Effects Prisms software. Integrated Video compositing software. Sound Designer & Session sound software.

7.5 Imagery from 'Raising the Standard'

Digital Images printed to slides toward dance performance. 1997.
Submitted on CDROM for Macintosh.

A collaboration with dancer and choreographer Paige Gordon pursued the question of australian identity. The research and development grant under which we worked staged creative development shows in October 1997 at the Choreographic Centre, Gorman House Arts Centre, Canberra.

A white, Australian, suburban existence was conveyed by the performance. Some imagery from the landscape sketch 'squarewaves' (originally intended toward this project) was used as still images. A selection of the original set (not all were suited to the performance) are included on CD ROM. These pursue Australian landscape imagery which can both work with the human figure on stage in front of the image and as symbolic imagery to engage in the issues of white invasion of Australia.

Still imagery from the video 'squarewaves' and still photography, are used in combination with scanned imagery and digital paintings.

SGI Indy Workstations, still camera. Interactive Effects: Amazon software.

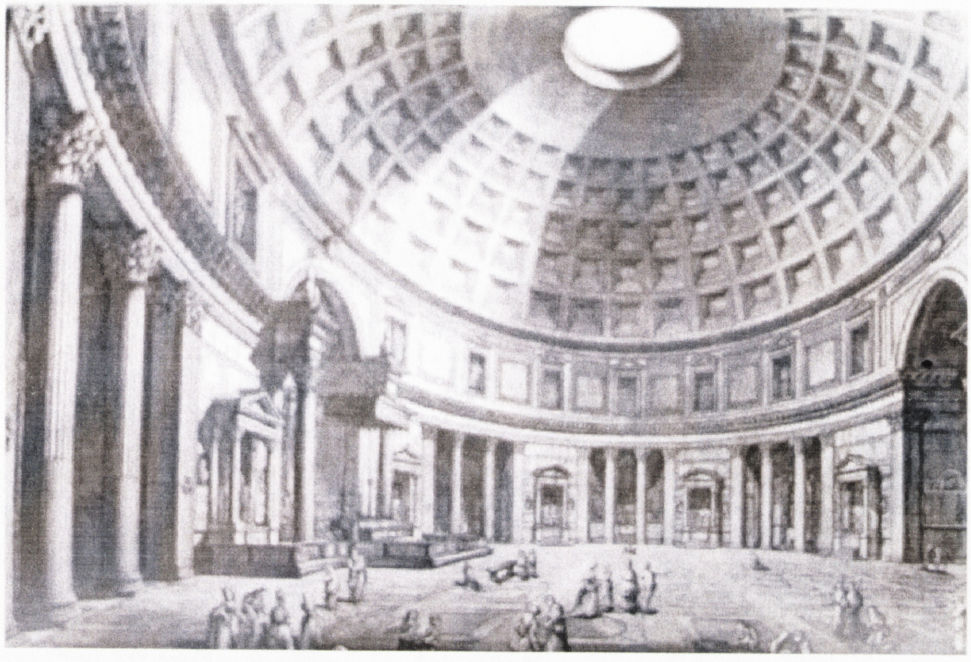

(i)



(iii)

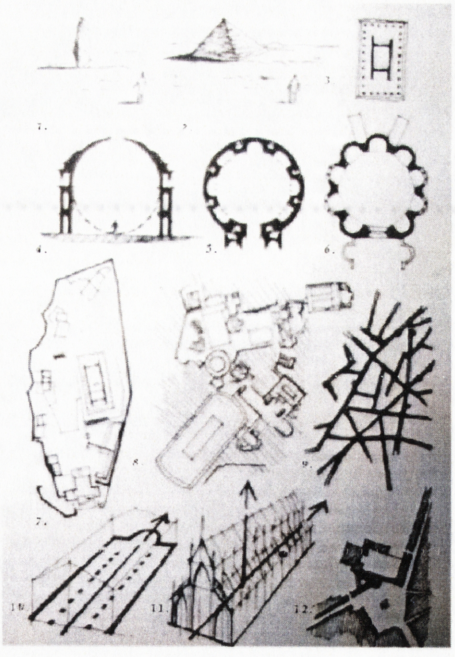

(ii)



(iv)



(v)

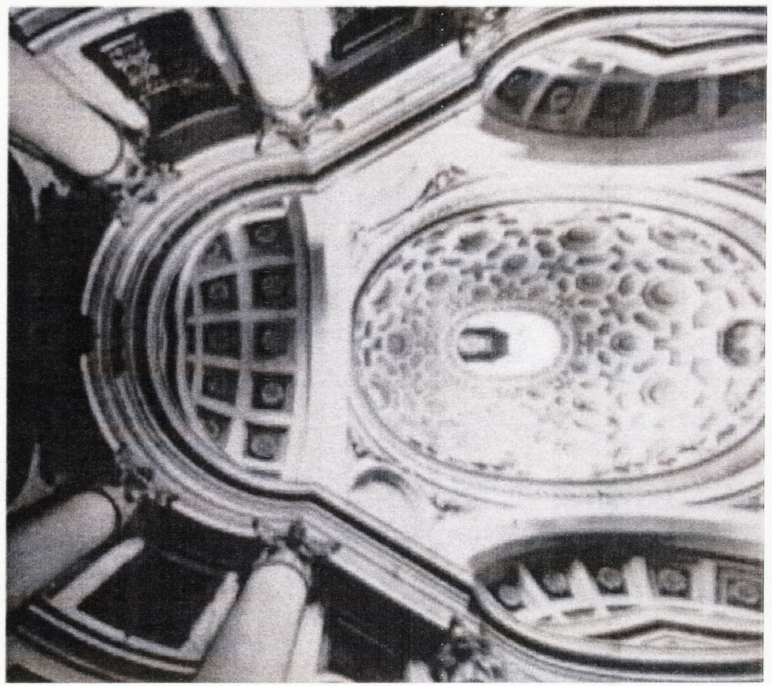

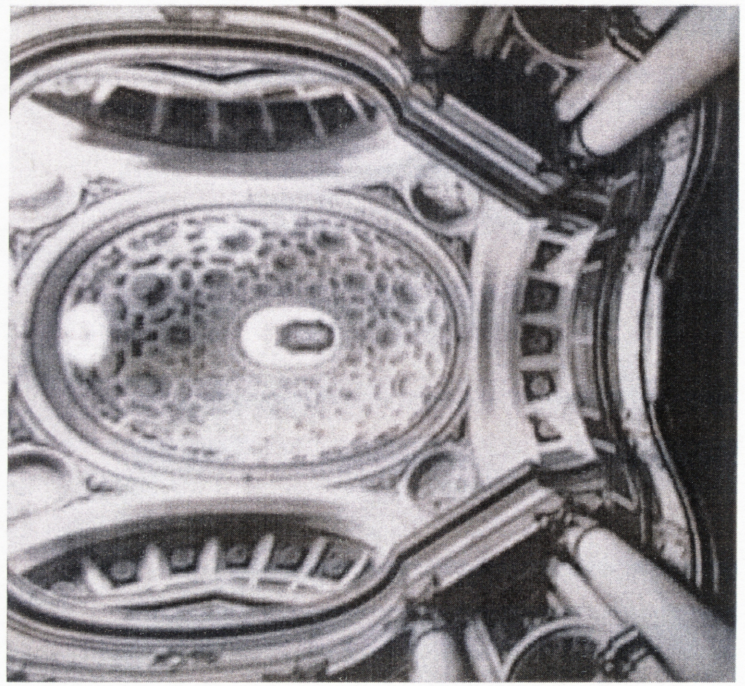

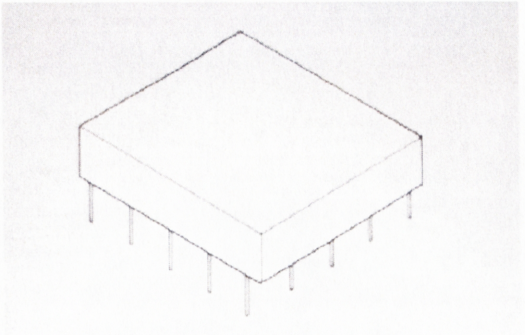

STATIC SYMMETRY OF THE BOX

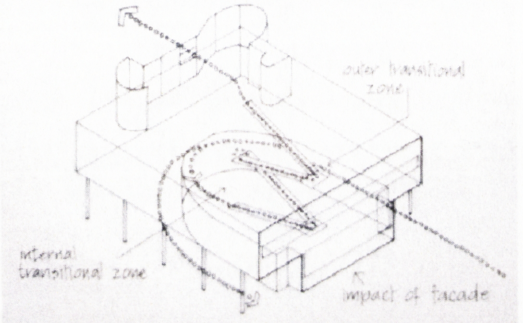

DYNAMIC CONTINUITY OF THE ROUTE

(vii)

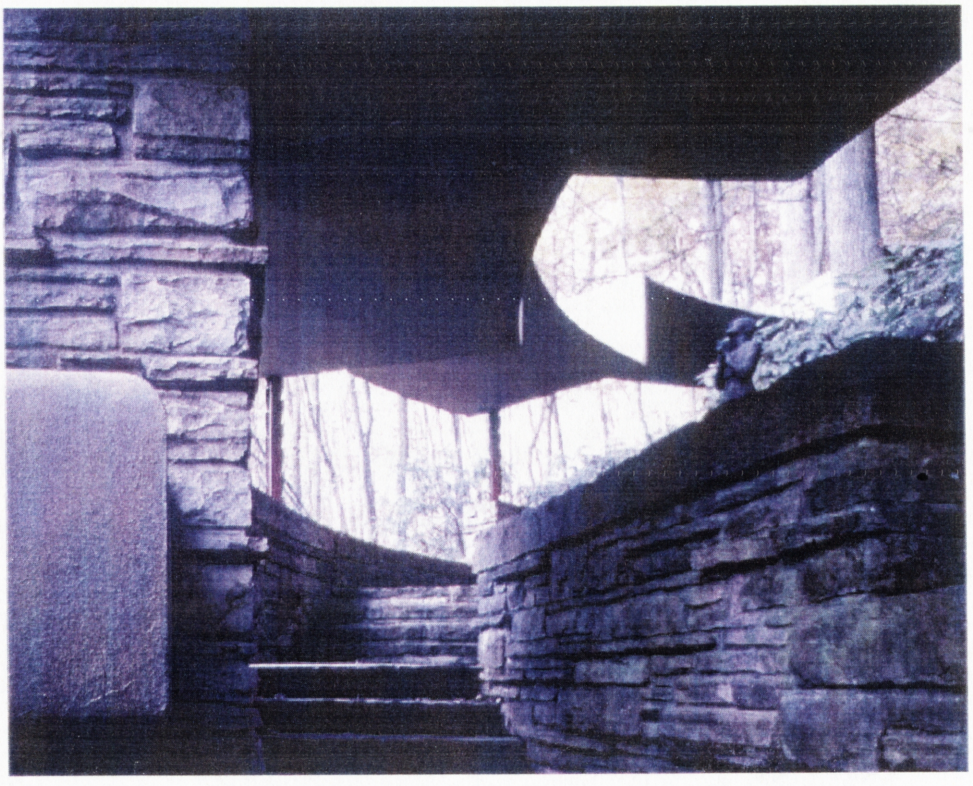

(viii)

Appendix A

The A.N.U. Wedge

Immersive projection theatres such as the Wedge and Cave feature screen displays, stereoscopic 'shutter glasses' for viewing, and a variety of input devices. In the pioneering Cave system an observer is immersed in a room with projections on a minimum of 3 sides and the floor. The Australian National University's Wedge system is similar but uses a less immersive but much more economical 2 sided 'wedge' or corner, where the viewer is oriented toward the vertex between the screens, figure C, over the page (Lusso 1998:3-4).

The dual 300MHz Intel based processor runs Windows NT and renders computer graphics environments in real time. Each time it calculates a view of the three dimensional computer model, it calculates 2 images, one for each eye. Consequently it is outputting 2 x 25 frames per second (PAL standard video play rate). The observer's shutter glasses filter between left and right eye information, by switching one eye off for one frame, then the other for the next, then the former for the next frame again. Thus each eye is looking at the image at 25 f/s, and the two eyes are a half frame out of step with each other. Infrared transmitters (M) attached to the screen's frame synchronise the glasses with the projector.

As mentioned, the observer's position within the Wedge corner space is tracked by a number of devices. An ultra-sonic transmitter (P) receives information about the observer's location and orientation from the head tracker (R) and 3D mouse (Q). This is subsequently passed to the computer and the view is updated accordingly. The 3D mouse, like the normal (desktop) mouse and keyboard, can manipulate the model as an object as well as navigate through the scene.

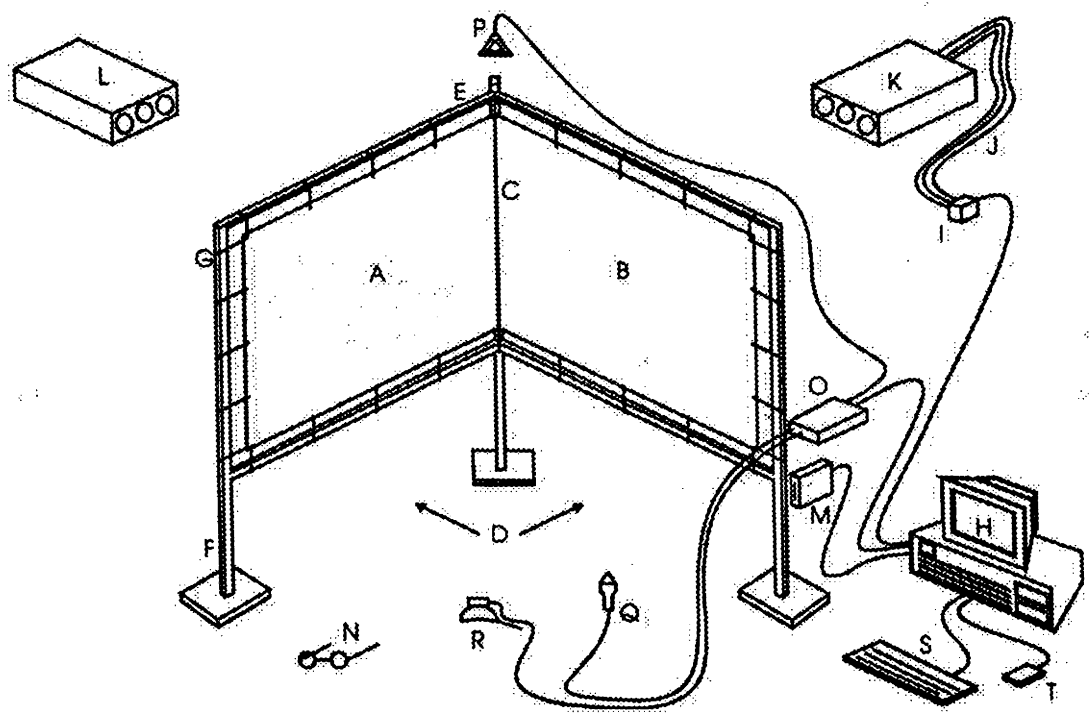

Figure 2 - Hardware configuration of the WEDGE. The screens labelled (A) and (B) meet along a vertical axis (C) and subtend a right angle (in the first realisation of the system). The WEDGE shaped viewing area (D), is between the two screens. The frame (E) is mounted on posts (F), at about waist height, and secures the screen with rubber bungs (G). A computer (H) sends a standard video signal to the graphics splitters (I), which converts it to a RGB signal (J) that goes into the projectors (K) and (L). An infrared transmitter (M) for the shutter glasses (N), and a controller box (O) for the ultrasonic transmitter (P), 3D mouse (Q), and head-tracker (R), are also connected to the computer. Input is through the 3D mouse, head-tracker, keyboard (S), and 2D mouse (T).

Diagram of the A.N.U. Wedge. The observer stands in the viewing area 'D' as described (Lusso 1998:4).

Bibliography

Anders, P. Being There Some Notes on a Cybereal Architecture. http://www.heise.de/bin/tp/issue/tp.htm?artikelnr=6071&mode=html [Accessed 7 March 1999]

Aristotle. (1967) "The Metaphysics". In Edel, A. and Johnson, E. (ed.) Aristotle. New York: Dell Publishing Co. Inc.

Baker, G.H. (1984) Le Corbusier An Analysis of Form. Berkshire: Van Nostrand Reinhold Co. Ltd.

Bergson, Henri. (1950) Matter and Memory. Transl. Matiere et Memoire by N.M. Paul and W.S. Palmer. London: George Allen & Unwin.

Calzini, J. (1997) "Imaginary Constructions of Space". Transition journal of Dept. of Architecture, RMIT, Issue 59/60, Melbourne: Transition Publishing.

Campbell. From thesis. http://www.hitl.washington.edu/publications/campbell/document/chapter1.html [Accessed 7 March 1999]

Chatelet, Gilles. (1997) "Virtuality: Plastic and Offensive". In Architecture New York Issues 19/20 New York: Anyone Corporation.

Coyne, R. (1994) "Heidegger and Virtual Reality: The Implications of Heidegger's Thinking for Computer Representations". Leonardo Volume 27 No. 1.

Coyne, R. (1995) Designing Information Technology in the Postmodern Age From Method to Metaphor. Cambridge: The MIT Press.

Deleuze, G. (1988) Bergsonism. New York: Zone Books.

Deleuze, G. (1997) "The Actual and the Virtual". Wolfe, C. (trans.), Architecture New York Issue 19/20.

Erickson, T. D. (1990) "Working with Interface Metaphors". In Laurel, B (ed.)The Art of Human Computer Interface Design. New York: Addison-Wesley Publishing Company, Inc.

Ferrua, A.S.J. (1991) The Unknown Catacomb A Unique Discovery of Early Christian Art. New Canarli: Geddes & Grosset Ltd.

Frampton, Kenneth. (1983) "Towards a Critical Regionalism: Six Points for an Architecture of Resistance". In Foster, H. (ed)The Anti-Aesthetic Essays on Postmodern Culture Seattle: Bay Press.

Grosz, E. (1990) Sexual Subversions: Three French Feminists. Sydney: Allen & Unwin.

Grosz, Elizabeth. (1992) "Bodies-Cities". In Colomina, B. (ed.)Sexuality & Space. Princeton Papers on Architecture, New York: Princeton Architectural Press.

Grosz, Elizabeth. (1994) "Space, Time and Bodies". Transition journal of Dept. of Architecture, RMIT, Issue 44/45, Melbourne: Transition Publishing.

Grosz, Elizabeth. (1997) "The Future of Space Toward an Architecture of Invention". In Architecture New York Issue 19/20 New York: Anyone Corporation.

Hayles, N. K. (1996) "Embodied Virtuality: Or How to Put Bodies Back in the Picture". In Moser, M.A. and Macleod D. (ed)Immersed in Technology Art and Virtual Environments. For the Banff Centre of the Arts, Cambridge: The MIT Press.

Hennessey, P. (1997) "Virtual Architecture: William Mitchell's City of Bits, + The Design of Cyberspace". Transition journal of Dept. of Architecture, RMIT, Issue 54-55, Melbourne: Transition Publishing.

Keller, E. (1995) "Cinematic Thresholds Instrumentality, Time & Memory in the Virtual". Basilisk
http://www.basilisk.com/C/CineThressH_966.html
[Accessed 7 March 1999]

Lusso, A. (1998) Virtual Environments for Engineering Applications. Pre-press submission of engineering thesis. Faculty of Engineering and Information Technology, Australian National University.

Lynn, G. (1996) "Form and Field" Anyone New York: The MIT Press.

Lynn, G. "Form" Basilisk
http://www.basilisk.com/G/GREG_LYNN_FORM_760.html
[Accessed 7 March 1999]

Lynn, G. "Formview" Basilisk
http://www.basilisk.com/aspace/formview.html
[Accessed 7 March 1999]

Lynn, G. "The Renewed Novelty of Symmetry" Basilisk
http://www.basilisk.com/R/renw_d_novlty_symmtry_576.htm
l [Accessed 7 March 1999]

McMillan, K. The Essence of Virtual Reality. Faculty of Built Environment, University of New South Wales.
http://www.fbe.unsw.edu.au/research/student/VRArch/essence
.html
[Accessed 7 March 1999]

Meyrowitz, J. (1985) No Sense of Place The Impact of Electronic Media on Social Behaviour. New York: Oxford University Press.

Mountford, S.J. (1990) "Tools and Techniques for Creative Design". In Laurel, B (ed.)The Art of Human Computer Interface Design. New York: Addison-Wesley Publishing Company, Inc.

Murray, K. (1992) "The Case Against Doors". Transition journal of Dept. of Architecture, RMIT, Issue 39, Melbourne: Transition Publishing.

Novak, M. Trans Terra Form Liquid Architectures and the Loss of Inscription.
http://www.t0.or.at/~krcf/nlonline/nonMarcos.html [Accessed 7 March 1999]

Norberg-Schultz, C. Genius Locii Towards a Phenomenology of Architecture.

Norberg-Schultz, C. (1971) "Baroque Architecture". In Nervi, P.L. (ed.)History of World Architecture(series). New York: Harry N. Abrams, Inc.

Pfeiffer, B.B. (1993) Frank Lloyd Wright The Masterworks. New York: Rizzoli International Publishers.

Rachjman, John. (1997) "Artifice in an Ersatz World". Architecture New York Issues 19/20 New York: Anyone Corporation.

Rachjman, John. (1997) "The Virtual House: A Description". Architecture New York Issues 19/20 New York: Anyone Corporation.

Relph, E. (1976) Place and Placelessness. Revised doctoral thesis, London: Pion Limited.

Rodenwalt, G. (1957) The Acropolis. Oxford: Basil Blackwell.

Schwartz, Ineke. (1997) "A Testing Ground for Interactivity The Water Pavilions by Lars Spuybroek and Kas Oosterhuis". Archis 9. Netherlands Architecture Institute journal. Doetinchem: Reed Elsevier Publishers.

Tafuri, M. (1987) The Sphere and the Labyrinth Avante-Gardes and Architecture from Piranesi to the 1970's. d'Acierno and Connolly (trans.), Cambridge: The MIT Press.

Tanaka, J. (1997) "From (Im)possible to Virtual Architecture". Trans Donahue, T. In Sakamura, K. & Suzuki, H. (ed.s)The Virtual Architecture "The Difference between the Possible and the Impossible" in Architecture. Tokyo: Tokyo University Digital Museum.

Thomson, K. (1994) "Spaces In-Between". Transition journal of Dept. of Architecture, RMIT, Issue 43, Melbourne: Transition Publishing.

Warlukurlangu Artists. (1987) Yuendumu Doors Kuruwarri.Canberra: Australian Institute of Aboriginal Studies.

Wertheim, M. (1999) The Pearly Gates of Cyberspace A History of Space from Dante to the Internet. Sydney: Doubleday.

Wilton-Ely, J. (1978) The Mind and Art of Giovanni Battista Piranesi. London:Thames & Hudson Ltd.

Zevi, B. (1993) Archtitecture as Space How to Look at Architecture. New York: De Capo Press.

Zevi, B. (1978) The Modern Language of Architecture. Canberra: Australian National University Press.