THE DESIGN OF BRUSHES FOR THE CANBERRA HOMOPOLAR GENERATOR

EP-RR 3

R. A. MARSHALL

First Published: *January, 1964*

Re-issued: *April, 1967*

Department of Engineering Physics

Research School of Physical Sciences

THE AUSTRALIAN NATIONAL UNIVERSITY

Canberra, A.C.T., Australia.

THE DESIGN OF BRUSHES FOR THE CANBERRA HOMOPOLAR GENERATOR

by

R. A. MARSHALL

First Published, January, 1964
Re-issued, April, 1967

Publication EP-RR 3

Department of Engineering Physics
Research School of Physical Sciences
THE AUSTRALIAN NATIONAL UNIVERSITY
Canberra, A.C.T. Australia

CONTENTS

1.	Introduction	1
2.	Duty Required of Brushes	1
3.	Experimental Results	3
4.	Brush Size and Voltage Gradient	6
5.	Brush Design for Rotor Rims, Positions 2, 3, 6, 7.	10
6.	Calculation of Rotor Surface Temperature	23
7.	Thermal Stress Cycling in Rotors due to Brushes	27
8.	The Alleviation of Thermal Stresses	30
9.	The Effect of Rotor Reversal	33
10.	Brush Design for Positions 1 and 8.	35
11.	Brush Design for Positions 4 and 5.	39
12.	Further Tests	42
	References	44

1. INTRODUCTION

This report is an account of the factors involved in the designing of solid brushes to take the full current pulse (1,600,000 amps for one second) from the Canberra Homopolar Generator. Subsequent to the original writing of this report, brushes were made and are at present in use in the generator. Of these, the outer ones are very much as shown in this report; the inner brushes (positions 1 and 8) differ in some detail; and the brushes between the rotors (positions 4 and 5) are being reconsidered and will be the subject of a later Department of Engineering Physics Research Report.

Details of the full scale tests of the brushes in the Canberra Homopolar Generator have been made by the author in the letter, "Tests with Solid Brushes on the Canberra Homopolar Generator," Nature, Vol. 204, No. 4963, p 1079, and the paper, "The Design of Brush Gear for High Current Pulses and High Rubbing Velocities," in I.E.E.E. Transactions on Power Apparatus and Systems, November 1966, Vol. PAS-85, No. 11, pp 1177-88. This report is presented because it contains information and ideas that were not included in the above two publications.

2. DUTY REQUIRED OF BRUSHES

The homopolar generator was originally designed to provide a current pulse lasting for about $1\frac{3}{4}$ seconds with a peak of 1.6 million amps.

During this time the two rotors, initially contrarotating at 900 r.p.m. would have passed through zero speed and have reached 400 r.p.m. in the reverse direction, still contrarotating. (The reason for the reversal of rotation is that the generator behaves as a capacitor and if connected to an inductive load its voltage, and therefore its rotation, will reverse as the circuit rings.) This will be referred to as the Classical Pulse and is shown in Figure 1 (reproduced from ref. 1).

It was planned to open the circuit at the first or second current zero.

However the original purpose for which the generator was designed, i.e. to provide the power for the air-cored orbital magnet of a 10 GeV proton synchrotron, has now been abandoned and the machine when completed is probably best regarded as a general facility for providing high currents for some seconds. It becomes necessary therefore to consider pulse types different from the classical pulse. Two such pulses are shown in Figures 2 and 3. Figure 2 shows the pulse obtained if the generator were discharged into a resistive load which is programmed in such a way as to draw a current which varies roughly sinusoidally with time and also has a peak of 1.6 million amps. Because the rotors cannot reverse in this case, $\int I\,dt$ will be less than in the classical pulse since this integral is proportional to the speed change. If it is assumed that the rotor speed is reduced from 900 r.p.m. to 100 r.p.m. in such a pulse, $\int I\,dt$ will be reduced by the factor (900 - 100) / (900 + 400) or 8/13. For the same pulse shape then, the pulse length will be reduced by this factor making it 1.1 seconds. This will be referred to as the Resistive Pulse.

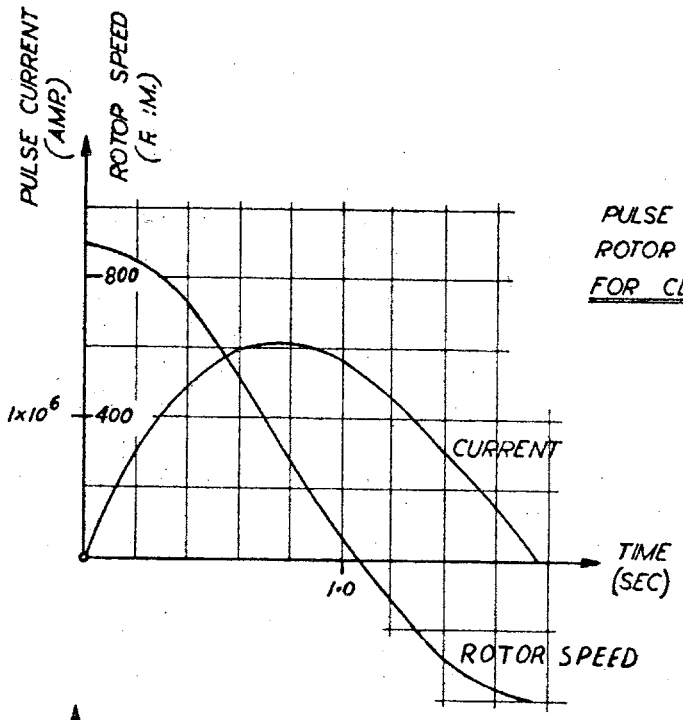

PULSE CURRENT AND ROTOR SPEED vs TIME FOR CLASSICAL PULSE

FIG 1.

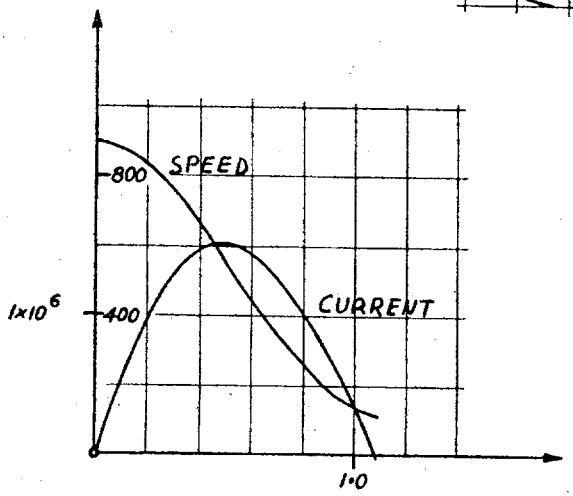

RESISTIVE PULSE

FIG 2.

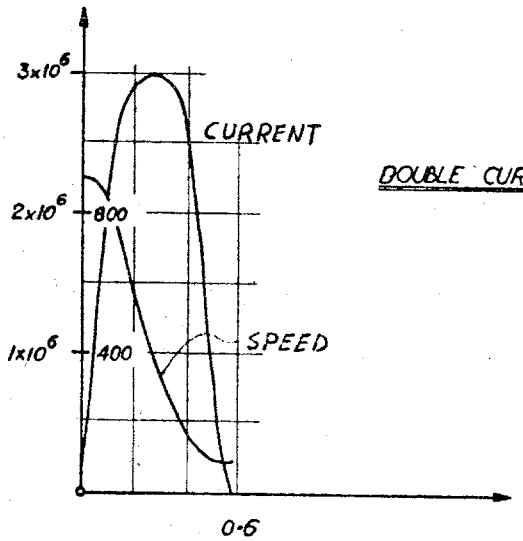

DOUBLE CURRENT RESISTIVE PULSE

FIG 3.

Figure 3 shows another possible type of pulse which will be referred to as the Double Current Resistive Pulse. It may be desirable to consider taking pulses of 3 million amps from the generator. This is not being seriously suggested here, but it is worth keeping such thoughts in mind during the design of brush systems. There are many other possible pulse shapes and types which might be considered including those possible by de-rating the generator, however in most of what follows the classical pulse conditions only are considered. De-rating will in general, ease brush duty and super-rating should not be seriously entertained in the absence of a specific proposal to use such a rating.

The design current-time requirements for the brushes are therefore:

Peak current	-	1.6×10^6 amp
Pulse length	-	$1\frac{3}{4}$ seconds
Pulse shape	-	roughly sinusoidal (see Figure 1)

The remaining requirements for brushes now divide into three groups:

a. The outside brushes, positions 2, 3, 6, 7. (See Figure 4 for position numbers.)

Surface speed	-	550 f.p.s. initially (900 r.p.m. x 140 in. dia.) to minus 240 f.p.s. finally
Surface material	-	mild steel

b. The top and bottom inner brushes 1, 8, and

c. The middle brushes 4, 5

Surface speed	-	1/3 of that for (a)
Surface material	-	copper for (b) copper or mild steel for (c)

(See Figure 4 on page 3)

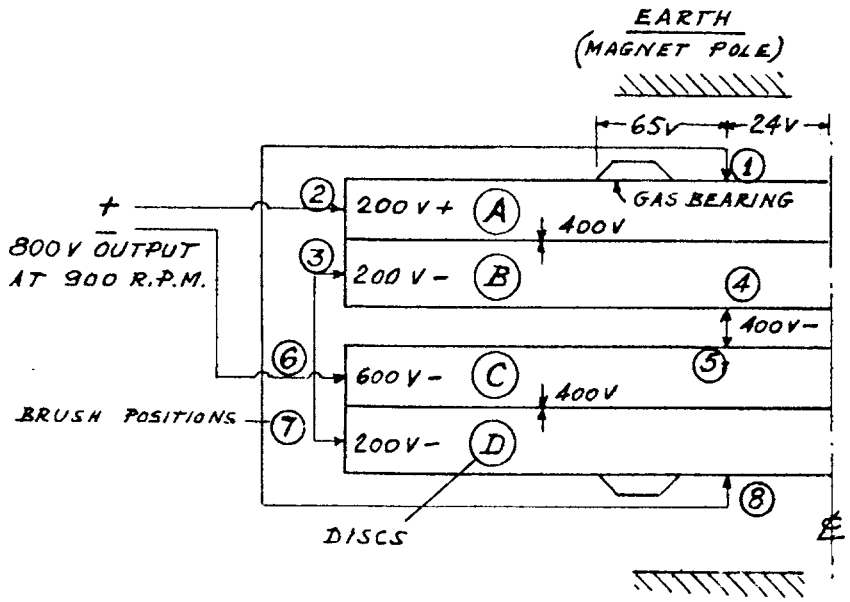

DIAGRAMMATIC REPRESENTATION
OF HOMOPOLAR GENERATOR
SHOWING :-
1. BRUSH POSITIONS
2. ELECTRICAL CIRCUIT
3. DISC IDENTIFICATION

FIG. 4.

3. EXPERIMENTAL RESULTS

Experiments with brushes at high speed (550 f.p.s.) and high pulse current densities (100,000 amp/sq.in.) were started one year ago using an $18\frac{1}{2}$ in. diameter rotor of mild steel which could be run at 6,600 r.p.m., giving a rim speed of 550 f.p.s. Current was supplied from heavy duty lead accumulators, and was carried across the rotor from a positive brush on one side to a negative brush diametrically opposite. This apparatus is shown in Figure 5. The brush holders used in the first experiments (different from those shown) consisted of rigidly guided cylindrical $\frac{1}{2}$ in. diameter brushes which were pushed onto the rotor with compressed air with loads of up to 6 lbs. each. Current was carried into the brushes by means of a copper rod screwed into their backs. These were used to carry pulses of up to 1600 amps for two seconds. Brush face area was 0.94 sq.cm. Brush material used was Morganite's high copper grade CMO. Most of our experiments have been conducted using this grade which was chosen because of its low resistivity, and low contact volt drop.

These tests were successful in that the rotor surface did not become damaged, wear rate was tolerable (about 0.0003 in. per pulse), the brushes showed no sign of crumbling or overheating, contact volt drop was moderate (about 1.1 v.

per contact average,*) however during pulses, red hot spots could often be seen moving around the rim of the brush which was melting as a result, solidified beads of copper collecting on the trailing edge. The contact volt drop when observed on a CRO showed an AC component of up to $\frac{1}{2}$ volt. We then decided to use a flexible mounting for the brushes as shown in Figure 5. These were arranged so that they could be removed easily for weighing to obtain wear rates. These behaved very well. The red hot spots were no longer observed. There was no sign of brush melting. The variability of contact volt drop was reduced. All subsequent work on this rig was done with these brush holders and with brushes 1 cm x 1 cm face x 1/8 in. normal to the rubbing face. The brush material was usually silver soldered to the beryllium-copper support strip.

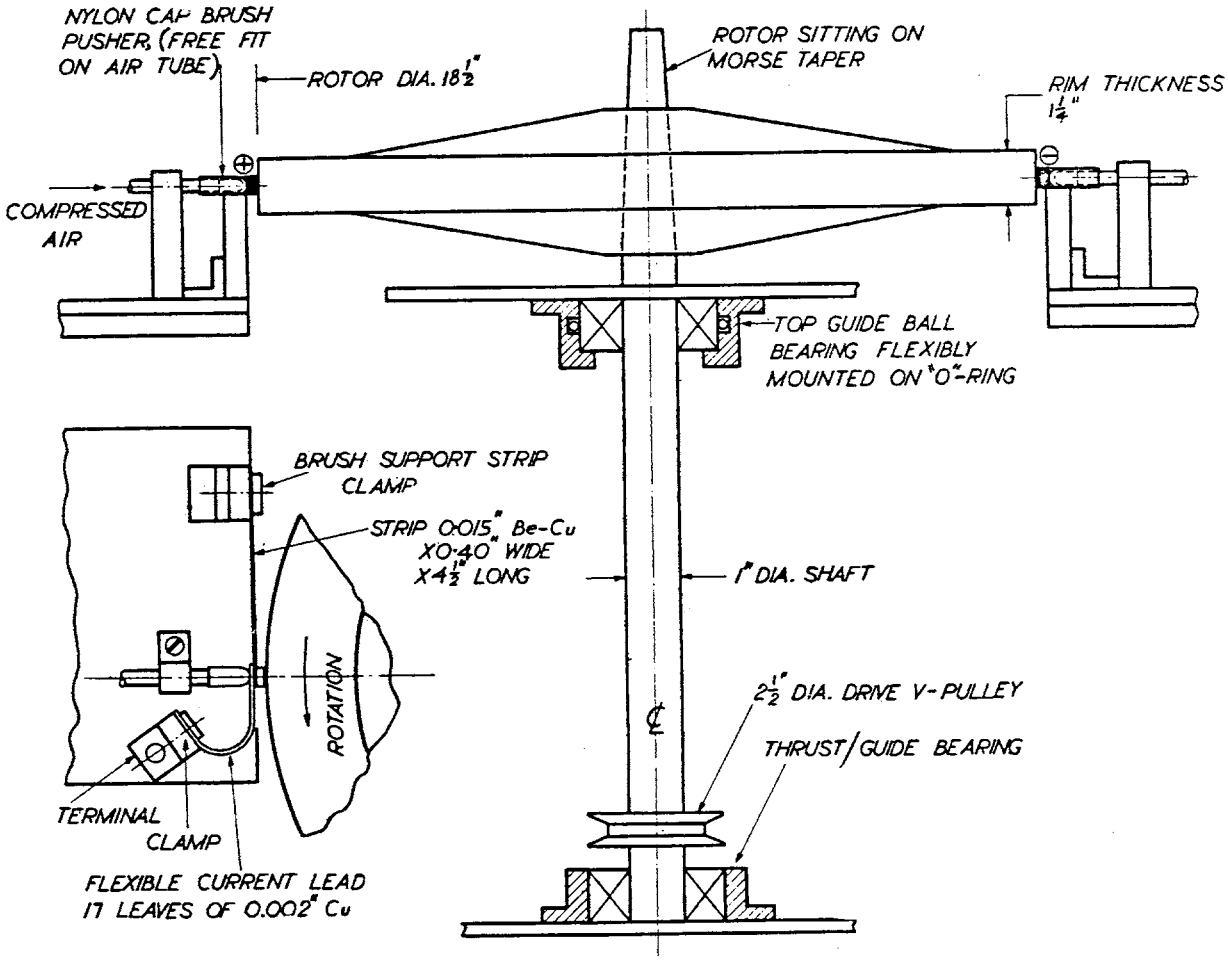

Figure 5. $18\frac{1}{2}$ in. Dia. Brush Test Rig Semi Schematic

* Coefficient of friction remained near the reported value for this material of 0.2.

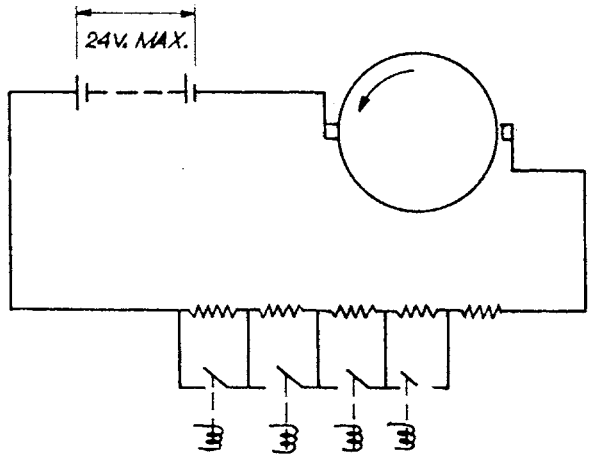

PULSE CURRENT CIRCUIT FOR 18½" DIA RIG

FIG 6.

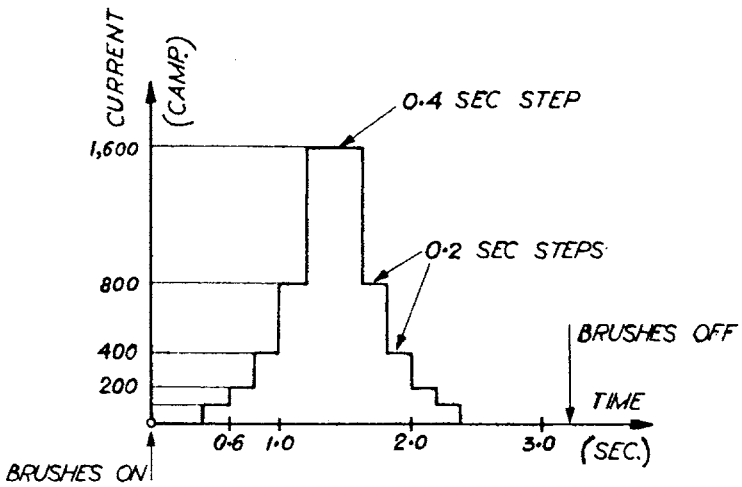

PULSE CURRENT ~ TIME FOR 18½" DIA. RIG

FIG 7.

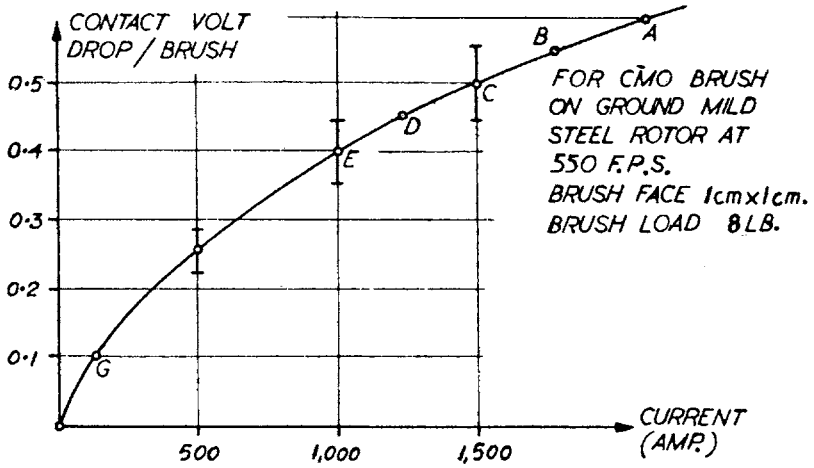

CONTACT DROP ~ CURRENT

FIG 8.

From this stage on, the test pulse sequence used was stepped automatically with a uniselector. This timed the sequence of operation of relays which were used to switch resistors in and out of the pulse current circuit. The uniselector was also used to control a solenoid valve to control air to the brush pushers and also to start and stop the recorder. The circuit and a typical current time "curve" is shown in Figures 6 and 7.

Figure 8 shows the contact volt drop per brush current curve for CMO brushes 1 cm x 1 cm face on ground mild steel rubbing at 550 f.p.s. with a contact load of 8 lb on each brush. Contact volt drop was found to increase with rubbing speed and since the maximum speed required is 550 f.p.s. this curve is used in subsequent calculations to give results that are conservative. The only occasion on which this curve may not lead to conservative results is in the case of asymetrical current distribution in a brush with a voltage gradient across it. This is discussed in the next chapter.

Other results of interest obtained from this rig are: friction coefficient whenever checked was 0.2 $\pm$ 10% (for CMO); brush wear per pulse was roughly proportional to rubbing speed and to brush load (provided that no sparking occurred); a load of 8 lb per brush gave non-sparking contact consistently for all speeds; contact volt drop v.s. current was nearly independent of brush load (if no sparking); the volumetric wear of brushes per pulse tended to be independent of brush face area for a given rubbing speed, brush load, and current pulse shape, right down to the point where area was reduced so far that the brush material became red hot due to resistive heating (about 100,000 amp/sq.in.) during the pulse. (These are referred to later as "peg and sledge" brush experiments.) This last result indicates that the current carrying limit of brushes might be current per single brush, rather than a limiting current density. If this is so, it means that a large number of small brushes will be better than a smaller number of larger brushes. The former alternative will also have the advantage that heating at the brush-rotor interface will average over the surface better.

There is also a tendency for contact volt drop to be lower for a given current as the current steps back down. This effect has not been included in the curve in Figure 8 because we are more interested in the curve as current is increasing, since this is when heating of the rotor during a pulse is worst.

4. BRUSH SIZE AND VOLTAGE GRADIENT

The brush size of 1 cm x 1 cm used in most of the experimental work has been chosen because it is convenient. We have had lead accumulators which would give about 2,000 amps quite readily and about 2,000 amps per sq.cm is about the duty required for the homopolar generator. This size also is a reasonable compromise on smallness as discussed in the previous chapter; anything much smaller is likely to be tedious to handle and expensive to buy in the larger numbers required. This is one of the many debatable decisions in this brush program, but in the absence of good reasons for changing it, it will be adhered to.

Another reason for using smaller brushes rather than larger, at least for the outside brushes, is that they must work in a voltage gradient due to fringing magnetic field. The magnitude of this field and the gradient it produces in the rotor rims (at 900 r.p.m.) is shown in Figures 9 and 10.

Consider now the behaviour of a brush in a voltage gradient. Assume that the current distribution in a brush is controlled only by the contact volt drop. (This is a good assumption for brushes of low resistivity such as CMO. The possibility of increasing the resistive volt drop in a brush to avoid circulating current effects has been examined and found to be quite ineffective for practical looking physical arrangements.) If a brush is run on a surface which has a voltage difference of (say) 0.2 V between the top and bottom edge of the brush, then the contact volt drop must be 0.2 V greater at one edge than the other. This will mean that a greater current density can be expected in the brush at that edge. If the brush is now considered to be made up of n parallel strip brushes of equal width, each strip seeing only one voltage on the rotor and each making similar electrical contact with the rotor, then the current vs contact volt drop for each of these n strips will be the same as that given in Figure 8, except that the current will be divided by n. Thus, if n = 100 and 15 amps were to flow through a strip, then the contact volt drop = 0.5 V. (This is justified by the "peg and sledge" brush experiments mentioned earlier. These experiments showed that if the brush were filed back in a strip down its middle, then the contact volt drop - current curve for the brush was unchanged. This means that each side gave the same contact drop when carrying half the total current and subject to half the contact load, i.e., n = 2. The above assumption is also justified assuming only that the current distribution in a full 1 cm x 1 cm brush is even on the average (zero voltage gradient). Then if the brush face is considered divided into n equal areas, then each carries 1/nth the total current and contact load and yet still sustains the full contact volt drop experienced by the whole brush.)

Returning now to the main argument--imagine the centre of the n strips to be carrying 15 amps and n = 100. The contact volt drop then = 0.5 V (point C, Figure 8). Because the voltage difference between top and bottom of the brush is 0.2 V then the contact volt drop at the edges will be 0.6 V and 0.4 V, the edge strips therefore carrying a current of about 22 and 10 amps respectively, from inspection of Figure 8 (points A and E). Similarly for the quarter way strips No. 25 and 75. These will experience a contact volt drop of 0.55 V and 0.45 V and therefore will carry a current of about 18 and 12 amps respectively(points B and D). Thus the current distribution across the brush-rotor interface under these conditions is given by the points A, B, C, D, E. Further the horizontal axis of the curve for this problem may be read as "Current Density--amp per sq.cm" for brushes that have 1 cm x 1 cm faces. The total current carried in this case equals the average current density x 1 sq.cm and is about 1,600 amps.

Since this is about the duty required of brushes of this size for the homopolar generator, the above example represents the actual situation. Thus the current density in one side of the brush would be two times that in the other at peak current and for a 1 cm wide brush in a voltage gradient of 0.2 V per cm. This factor of two times may be a little fierce, but looks like a reasonable first choice until tests have been run with brushes in a magnetic field.

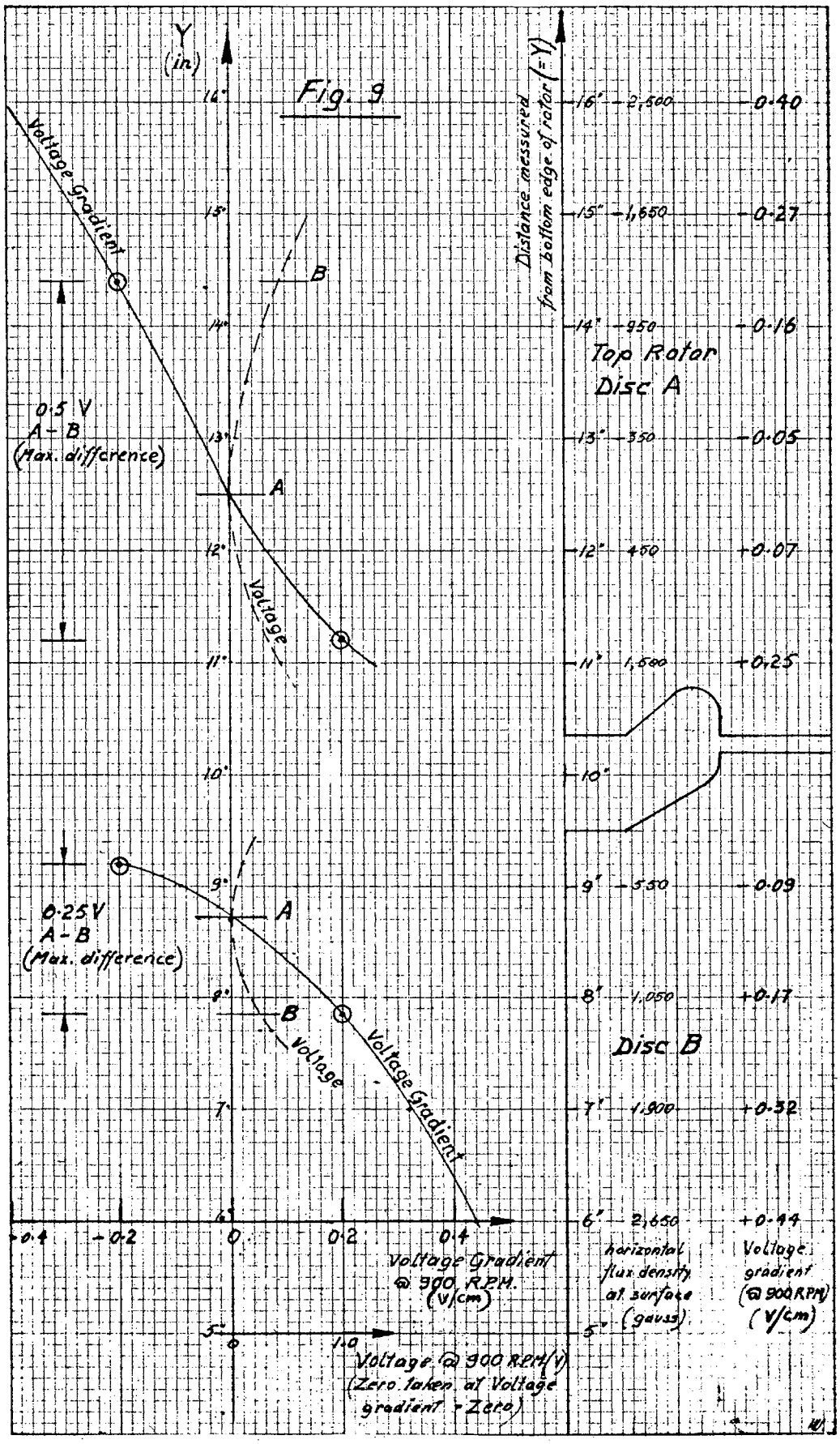
Fig. 9
Y (in)
Voltage Gradient
Voltage
0·5 V
A – B
(Max. difference)
0·25 V
A – B
(Max. difference)
A
B
Voltage Gradient @ 900 RPM. (V/cm)
Voltage @ 900 RPM (V)
(Zero taken at Voltage gradient = Zero)
Distance measured from bottom edge of rotor (= Y)
Top Rotor
Disc A
Disc B
horizontal flux density at surface (gauss)
Voltage gradient (@ 900 RPM) (V/cm)
16" 2,500 0·40
15" 1,650 0·27
14" 950 0·16
13" 350 0·05
12" 450 +0·07
11" 1,500 +0·25
10"
9" 550 0·09
8" 1,050 +0·17
7" 1,900 +0·32
6" 2,650 +0·44
5"

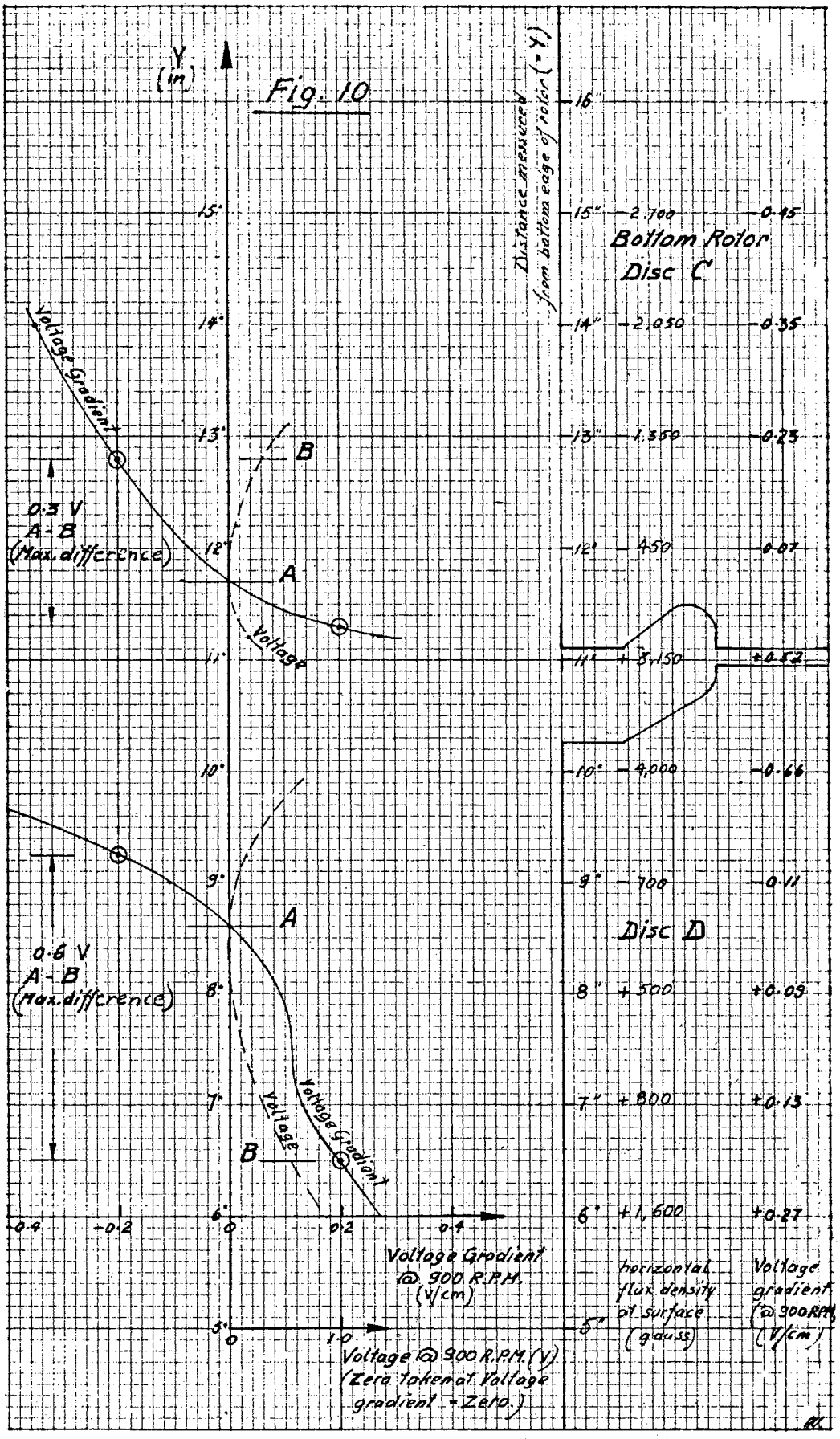
Fig. 10
Y (in)
Distance measured from bottom edge of rotor (= Y)
Bottom Rotor
Disc C
Disc D
Voltage Gradient
Voltage
0.3 V
A - B
(Max. difference)
0.6 V
A - B
(Max. difference)
A
B
16"
15"
14"
13"
12"
11"
10"
9"
8"
7"
6"
5"
-2,700
-0.45
-2,050
-0.35
1,550
-0.23
450
-0.07
+3,150
+0.52
-4,000
-0.66
-700
-0.11
+500
+0.09
+800
+0.13
+1,600
+0.27
-0.4
-0.2
0
0.2
0.4
1.0
Voltage Gradient @ 900 R.P.M. (V/cm)
Voltage @ 900 R.P.M. (V)
(Zero taken at Voltage gradient = Zero.)
horizontal flux density at surface (gauss)
Voltage gradient @ 900 RPM (V/cm)

Another interesting point to emerge from this approach is that the current densities in the brushes with zero net current passage can be found. Assume that the curve (Figure 8) extends into the third quadrant, then the current density in the outside edges will be about $\pm$ 150 amps per sq. cm (point G), giving a net circulating current of about 40 amps. This is the condition that will exist when the brushes are first pushed on and before the pulse current begins to flow. The total heating effect at the brush edges due to this would be about 150 x 0.1 = 15 watts per sq. cm which will be seen later to be acceptably small, being about one sixtieth of the friction power input density per brush at full rotor speed.

Accepting then that a voltage gradient of 0.2 V per cm is a reasonable limit, it can be seen from Figures 9 and 10 that the width of rotor surface on which brushes (1 cm wide) can be run is 3 in. $1\frac{1}{2}$ in., $1\frac{1}{2}$ in., $2\frac{3}{4}$ in. respectively for rotor discs A, B, C and D.

Finally a comment on the situation mentioned earlier in which the curve of Figure 8 might not be conservative. If a curve similar to that in Figure 8 were used in which all the contact volt drop values were reduced to say three quarters of those shown, then applying this method to find the ratio of current densities in the top and bottom edges of the brush, it would be found that for otherwise identical conditions, the ratio would be bigger. This is not the case in practice however. Experiments show that if the rubbing speed is reduced by some factor, then contact volt drop is not reduced so far. Thus, although contact volt drop reduces at reduced speed, it does not reduce as much. Since voltage gradient on the rotor surface is proportional to speed, this means that at reduced speed asymetrical current distribution gets better and not worse. The use of Figure 8 is therefore still conservative in this case.

5. BRUSH DESIGN FOR ROTOR RIMS, POSITIONS 2, 3, 6, and 7

There are three more or less distinct brush problems on the homopolar generator, namely:

a. Rotor rim brushes, positions 2, 3, 6, 7
b. Top and bottom inner brushes, positions 1 and 8
c. Mid inner brushes, positions 4 and 5

The rim brushes are probably the most difficult of these because of the high speed at which they must run and also because they must run on the rotor itself. The top and bottom inner brushes are simpler in that the rubbing speed is down to 1/3 of that on the rims, and also that there is space in the generator to use copper slip rings on which the brushes will run. These must make good electrical contact with the rotors but that problem is not examined here. The use of copper with its better thermal conductivity eases the problem and the fact that a separate contact surface is used means that repair and maintenance of the surface if necessary, is less costly. For the mid inner brushes, there may not be sufficient room to clamp reasonably sized slip rings,

the space being quite restricted. This also means that the mechanical problems involved in clamping rings in there are not simple. (Remember that the clamping of rings in positions 1 and 8 is obtained as a bonus from clamping the rotors to their shafts which must be done in any case.)

A solution to the problem might be to run brushes on the rotor surface, the problems associated with this being that the voltage gradient there on the rotor is 1 V per cm, and it is undesirable to heat the rotor surface there any more than necessary, because the centrifugal stresses are high. This solution is examined further in chapter 9. (There is a special reason that this solution can work here and not for positions 1 and 8, namely that use can be made of the fact that the rotors are contrarotating. This means that bands of equal voltage can be connected quite readily. This is a much more difficult thing to do for positions 1 and 8.)

Returning now to the rim brushes, the prime problem is that of heating of the rotor surface during the time that the brushes are in contact. This heating arises because of energy lost due to friction, and pulse current crossing the contact volt drop potential difference. These are calculated below, assuming:

rotor speed	=	550 f.p.s.
number of brushes	=	864 per position (see later)
brush load	=	8 lb each
coefficient of friction	=	0.2
rotor circumference	=	1100 cm
Therefore current per brush	=	1,850 amps at 1.6 million amps total
and contact volt drop	=	0.55 V (from Figure 8)

If all the brushes run in one band 1 cm wide, then

Friction power	=	864 x 8 x 0.2 x 550 ft-lb per sec total
	=	0.94 kW per sq.cm of rotor surface at full speed
Contact volt drop heating	=	$1.6 \times 10^6 \times 0.55/1000$ kW total
	=	0.80 kW per sq.cm of rotor surface at peak current

again for a 1 cm wide band.

Consider now the situation as far as disc D is concerned since this is the one that will be used in the first brush tests. There is a band of $2\frac{1}{2}$ in. width inside which the voltage gradient is less than 0.2 V per cm. This is $6\frac{1}{4}$ cm. If the brush groups are staggered in such a way as to use all this area, then the power density figures above may be divided by $6\frac{1}{4}$, giving:

Max. friction power density = 0.15 kW per sq. cm of rotor

Max. contact volt drop power density = 0.13 kW per sq. cm of rotor

(The latter will be referred to as V x I heating.)

Remembering that the friction power at any instant is proportional to rotor speed, a curve of friction power density against time may be constructed for any particular pulse shape. The same may also be done for V x I heating remembering that at half current, the power is down to 0.33 of its peak value and at quarter current, it is down to 0.11 of its peak, due to the reduced contact drop at reduced current. These may be added to give a total power density vs time curve. This is done in Figure 11 which also assumes that the brushes are in contact with the rotor for half a second before and after the pulse. It also assumes the classical pulse of Figure 1.

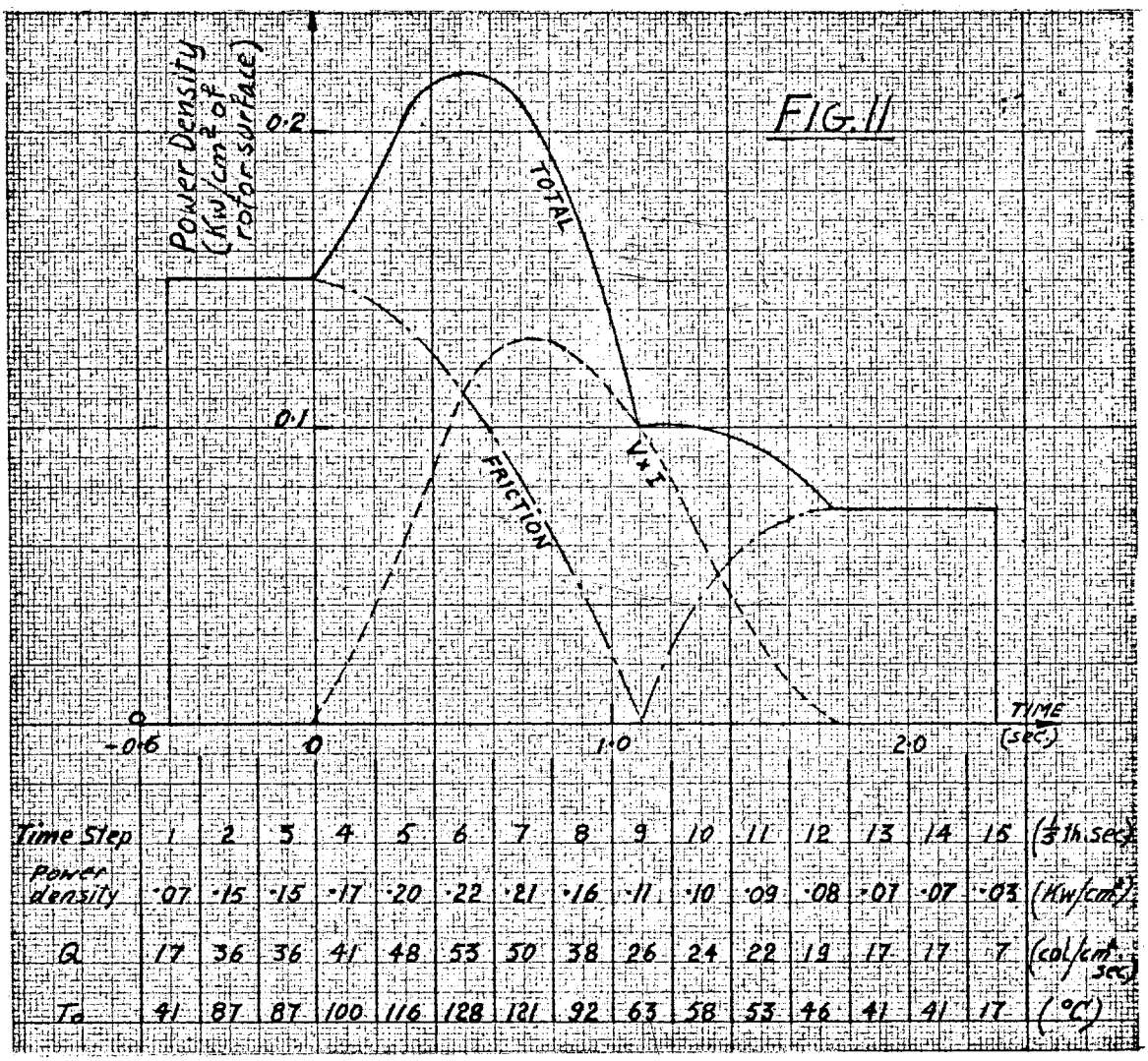

Also tabulated in Figure 11 are data obtained from the Power Density vs Time curve and values derived from this for use in rotor temperature calculations in the next chapter.

Turning now to the mechanics of the brush gear, a specification for this is given below with comments as to how the rim brush design meets them added (see Figures 12a, b, c, d).

Specification for the Mechanics of Pulse Brushes, Positions 2, 3, 6, and 7.	Comments
GENERAL	
1. Separate Tracks - Running up brushes and pulse brushes to run on separate tracks if possible.	During the testing of the generator with NaK, the rotor was damaged slightly at some stage, by the running up jets and some suspicion attaches to the rectifiers which supply the running up current. If running up brushes were to contact on the same track as the pulse brushes and they were to damage the track in a similar manner, then this could precipitate a failure of the pulse brushes. This possibility must be avoided by having separate tracks for the two functions.
2. Brush Size - Brushes to be as small as is reasonable (1 cm x 1 cm say)	This has been discussed previously. The 1 cm height has been picked for reasons of current distribution in the brush. The dimension in the direction of rotation has also been picked as 1 cm because this is the size of brush that has been used in the experiments. It is possible that a dimension of 2 cm in this direction would be acceptable and this will be considered for subsequent assemblies when more time is available for experimenting with such a size.
3. Brush Mass - Brushes and their attached leads, etc. to be as light as is reasonable.	We think brush mass should be kept low to enable it to follow irregularities in the rotor as closely as possible. This is discussed in ref. 3.

Specification for the Mechanics of Pulse Brushes, Positions 2, 3, 6, and 7.	Comments
BRUSH MOUNTINGS AND LOADS	
4. Flexibility - To be such that brush can sit squarely on rotor even if wear is somewhat uneven.	As discussed before, this is considered desirable. It is provided for by the Brush Mounting Strips which consist of seven strips of 0.008 in. copper strip. These are quite flexible and allow the brush to sit squarely on the surface when pushed from behind.
5. Spring Rate - To have a low spring rate so that extra force is not required as brush wears (this to include extra e.m. forces also).	The Brush Mounting Strips meet this specification. The loop at the top helps considerably. A similar loop at the bottom is detrimental as it then does not locate the brush properly against up and down movement.
6. Strength - To be strong enough to withstand the friction force and e.m. forces for 1.6×10^6 amp pulse (also for 5×10^6 amp short if possible).	The forces on the Brush Mounting Strips are: 2 lb sideways due to friction (assuming a brush load of 10 lb and a friction coefficient of 0.2); 1.4 lb radially inwards due to the interaction of full pulse current on the pinch field (pinch field at peak current is 1,700 gauss, peak current per lead is 1,800 amps, current carrying length of lead is 4 cm); 0.6 lb sideways due to interaction of pulse current on main field (main field is about 1,000 gauss vertically, length involved $1\frac{1}{2}$ cm). The strips are adequately strong for these forces.
7. Stability - Brushes must not topple sideways due to friction forces. Must be stable for both directions of rotor rotation.	With the brushes as drawn, the possibility exists that if friction were to jump to abnormally high value momentarily, then the brushes might topple over backwards. To prevent this an Anti-topple strip is shown running along behind all the brushes. This would be of some reasonably flexible insulating material such as 1/32 in. thick Tufnol. The

(Continued)

Specification for the Mechanics of Pulse Brushes, Positions 2, 3, 6, and 7.	Comments
7. Stability (Continued)	effect of this would be to tie the brushes together at their leading and trailing edges. This would limit flexibility somewhat, but not seriously. This is where it will be advisable to look at the possibility of longer brushes in the long run: this would also limit flexibility--perhaps more so.
8. Pinch Forces - To be arranged so that pinch forces on the leads tend to hold the brushes onto the rotor, not lift them off.	This is adhered to. The pinch field is behind the lead.
9. Resistive heating - Leads to be thick enough so that the pulse current does not overheat them (this applies to the series resistors also).	Temperature rise calculated for leads for the classical pulse is about 65°C (Brush Mounting Strips are 0.450 in. wide). Temperature rise in the Series Resistor Strips is 200°C. (Strip is brass, 25% IACS, 0.450 in. wide x 0.064 in. thick x 14 cm long.)
10. Series Resistors - These may be the leads themselves or else whereas is most convenient.	The reasons for these are twofold. The first is to ensure that all the brushes share current evenly even if the contact behaviour of some brushes should differ from others. No trouble is expected here. On the 2 in. dia. test rig (see later) we were running 4 brushes in parallel with series resistors dropping only 1/10 volt at 1,600 amps per brush and current shared within ± 10% between the four. We plan to drop one volt at full current in these resistors. The other reason is that at full speed there is a maximum voltage difference on the brush track of 0.6 volts. This must be swamped. It turns out that for the classical pulse, taking into account the fact that max. current occurs at about half speed, the 1 volt drop is adequate.

Specification for the Mechanics of Pulse Brushes, Positions 2, 3, 6, and 7.	Comments
11. Spring Return - Some spring return action is required to hold the brushes off the rotor between pulses.	The Brush Mounting Strips provide this.
12. Non-binding - Brush movement to be free all the way down to fully worn out.	The strips also provide this. Because they are a hinge system they cannot readily clogg up with wear debris and also the forces listed under item 6 do not cause binding as could happen in a conventional sliding brush holder.
13. Insulation - Brushes and leads to be insulated from their neighbours (to enable series resistors to do their job).	This is provided for by spacing the brushes apart with the Anti-topple strip and insulating by use of the Insulating Channels. The top and bottom plates are of insulating material (Tufnol) as also are the brush pusher caps.
14. Ease of manufacture - to be reasonably simple to manufacture, assemble and fit.	This has been given much attention. Many arrangements have been looked at and this one looks reasonable. The worst part was the Main Frame, but we have now found that we can get a brass extrusion to our requirements at moderate cost and this solves the problem to a large extent.
BRUSH PUSHERS	
15. Air - To be air operated	This has been chosen to actuate the brushes because it is clean and because of its high elasticity as compared with any liquid.
16. Number off - One to each brush.	Again, other arrangements we looked at such as reducing the number of pushers and using see-saw load equalizers only increased complexity. There are many units, i.e., one per brush with this arrangement, but the items involved are simple and should be easily mass produced.

Specification for the Mechanics of Pulse Brushes, Positions 2, 3, 6, and 7.	Comments
17. Non-binding - To be free for full travel and at all times.	These pushers should provide this. A point about this design is that the actuating system (the Pushers) is not called on to support or resist any forces on the brushes and leads except the normal reaction with the rotor and to a slight extent, toppling torques. This reduces the chance of binding and sticking to a minimum.
18. Force vs. Travel - Their force not to change with travel (for a given air pressure).	This specification is met. Other systems considered such as using rubber tubes with air in them all suffered from the defect that for a given air pressure force decreased with travel. This would mean that force would decrease as wear occurred and this is not desirable.
19. Force Magnitude - To be capable of delivering a force of 10 lb per brush (max.)	This is met using 90 p.s.i. air pressure.
20. Force Latitude - Force to be controllable to about $\frac{1}{4}$ lb at all times regardless of wear and pulse current.	This is met as far as the Pushers are concerned but not for the whole brush system. The extra force required to push the Brush Mounting Strips into the "fully worn" position is about 1 lb. This must be kept in mind during the operation and brush air pressure increased if necessary as wear proceeds.
21. Overheating - Should be able to stand occasional accidental overheating.	This is met by making the Pushers out of thermosetting material rather than a thermoplastic. In test we have used nylon and had it melt and weld to the back of the brush.
22. Reliability - Not to be subject to "blowouts" or sticking.	This is another reason for not using blow-up rubber bags for pushers. They are vulnerable to a point. The weakest point in the system shown is

(Continued)

Specification for the Mechanics of Pulse Brushes, Positions 2, 3, 6, and 7.	Comments
22. Reliability (Continued)	the Flexible Air Hose. If one bursts, it would drop air pressure and could cause a brush failure. These will have to be of good quality.
23. Air Consumption - To be "reasonable".	This will be less than half a litre of free air per second per pusher. At this rate the air in the receivers (40 cubic ft connected)would drop in pressure by 5 p.s.i. per second. Since the brush load required is less at lower speed and pulse length is the order of 2 seconds, this is all right.
24. Speed - To be capable of fast action.	This is met by having the smallest manifold volume consistent with small flow pressure drop and by using fast acting air valves. One quarter second to full on is being aimed at.
25. Ease of Manufacture - To be reasonably simple and to have a stable shape.	Manufacturing ease will be met by the fact that the shape is simple. Stability is more difficult. Many plastics swell and could cause sticking if wetted. It is just possible that the rotor may have to be water cooled during a pulse, in which case a non-swelling material would have to be chosen. Tufnol* tubing appears to be the best possibility for the short term. We are, however, investigating the position as regards moulded glass reinforced nylon (melting not withstanding) and precision fibre glass tubing.
26. Form of Tip - It may be a good idea to make the pusher ends square so that if the brushes wear unevenly the point of application moves over to tend to correct this.	It is intended to have a flat end 0.200 in. dia., i.e., half the brush width on the pushers to provide this effect. This seems like a reasonable compromise.

*Tufnol is a cloth or paper reinforced resin

The brush gear proposed for use on the rotor rims in shown in Figures 12a, b, c, and d.

The air supply for the brush pushers is shown schematically in Figure 13 for positions 7 and 8. For the Rim Brushes (7) the brush manifold will be connected to four 10 cu. ft receivers with a valve each. The brushes would operate satisfactorily if only three of these valves were to open. There is a non-return valve at the manifold after the main supply hoses so that if a hose were to burst the manifold would still hold pressure.

Concerning the brush units themselves, there will be 72 spaced around a rotor disc each with 12 brushes, thus making a total 864 per set. (72 is a standard division for the generator and 12 fit conveniently on a unit.) The thickness of the spacer blocks will be varied systematically around the set to allow the brushes to run on the full $2\frac{1}{2}$ in. band (XX). They will be spaced up and down regularly around the machine arranged in four groups stepping up, down, up and down again. This is to avoid possible inductive effects which might cause sparking. Brush units will be readily removable two $\frac{1}{2}$ in. nuts and the air hose being involved only. The contact clamp studs and spacer blocks will remain in position on the brush mounting plate.

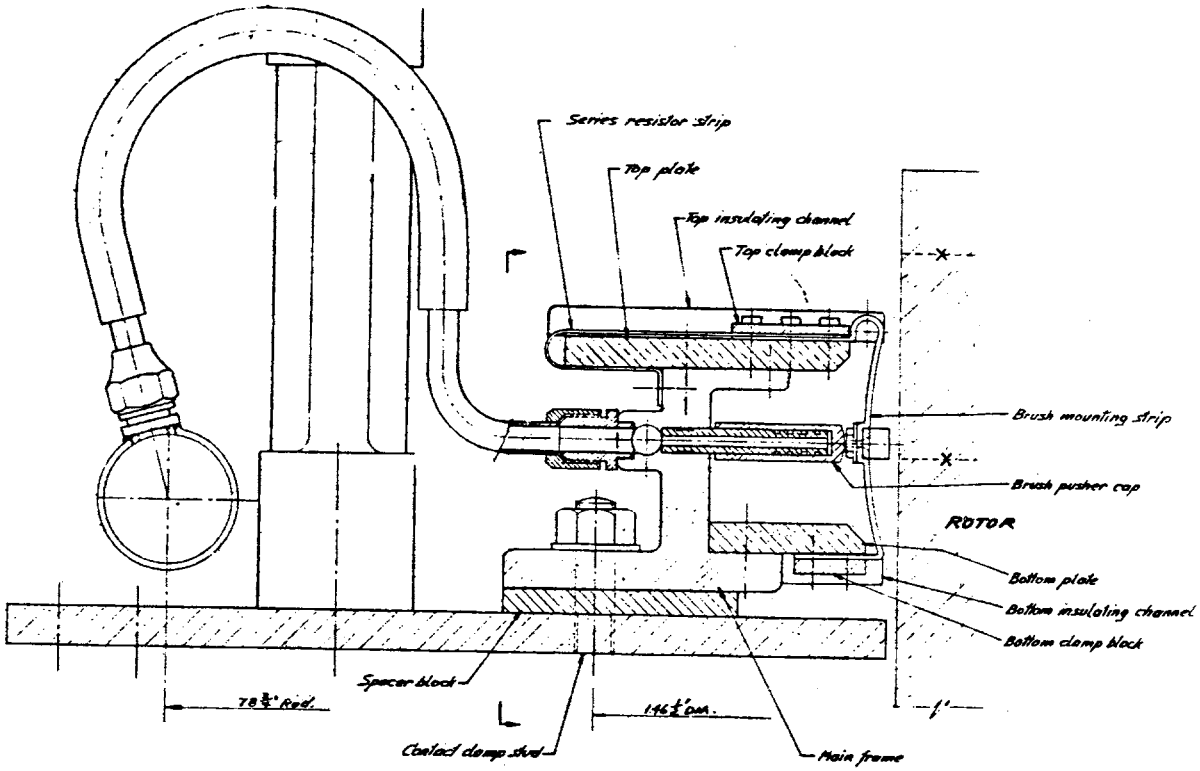

Figure 12a. End Elevation of Rim Brush Unit

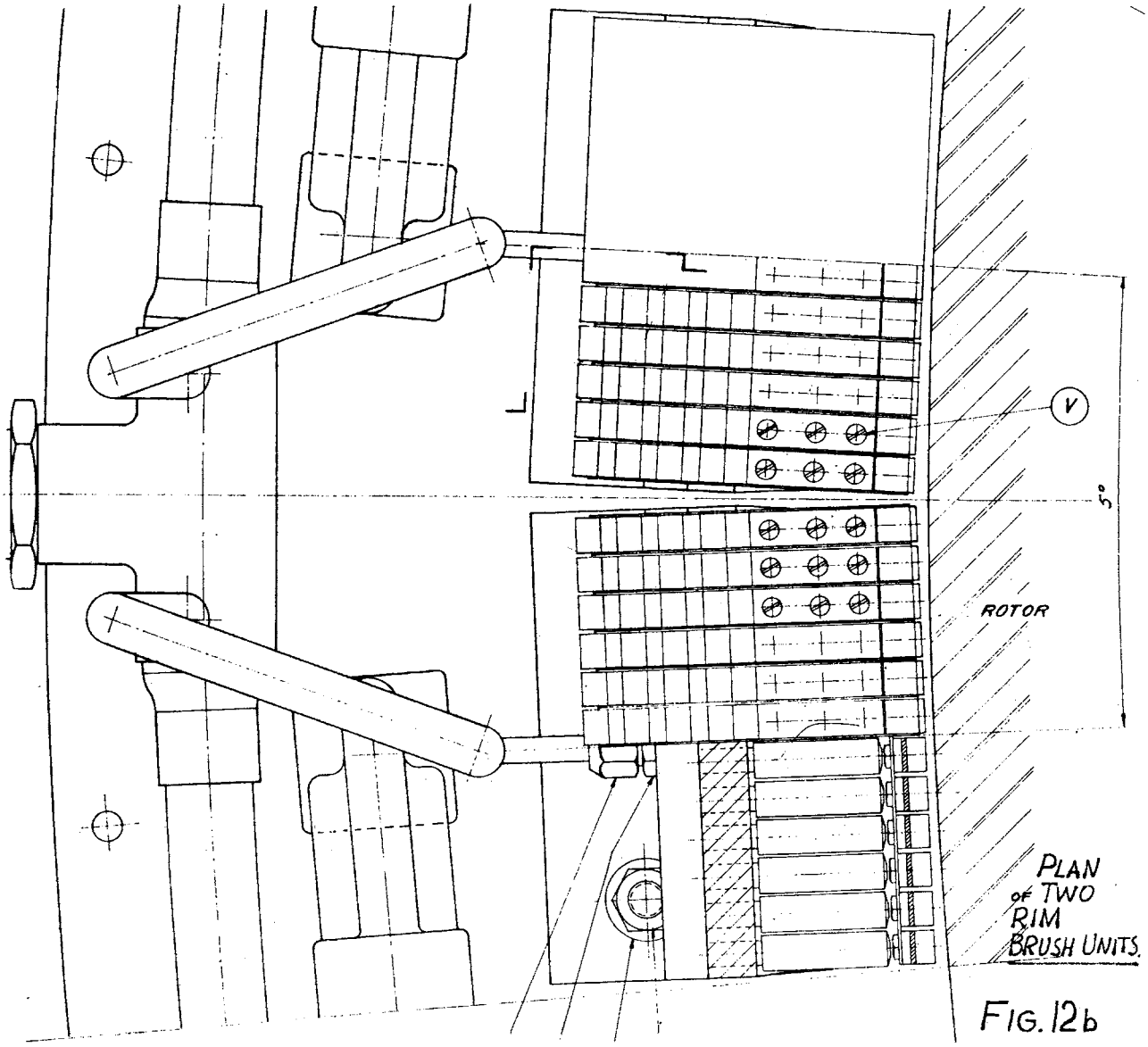

FIG. 12b

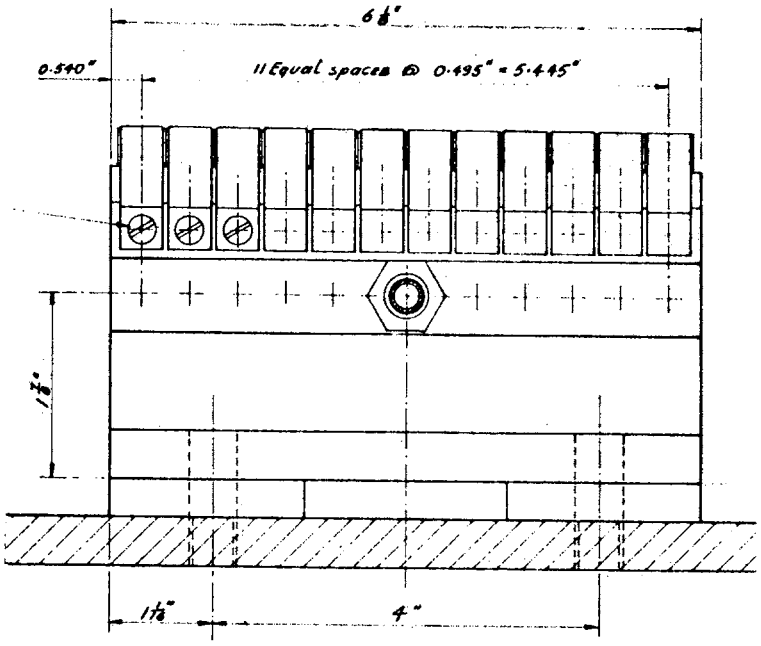

Figure 12c. Back Elevation of Rim Brush Unit

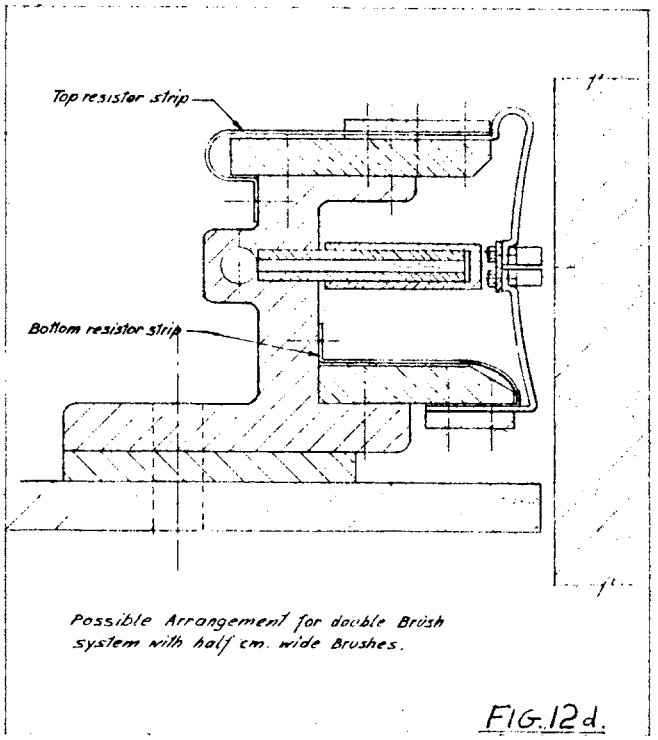

Figure 12d. Possible Arrangement for Double Brush System with Half cm. Wide Brushes

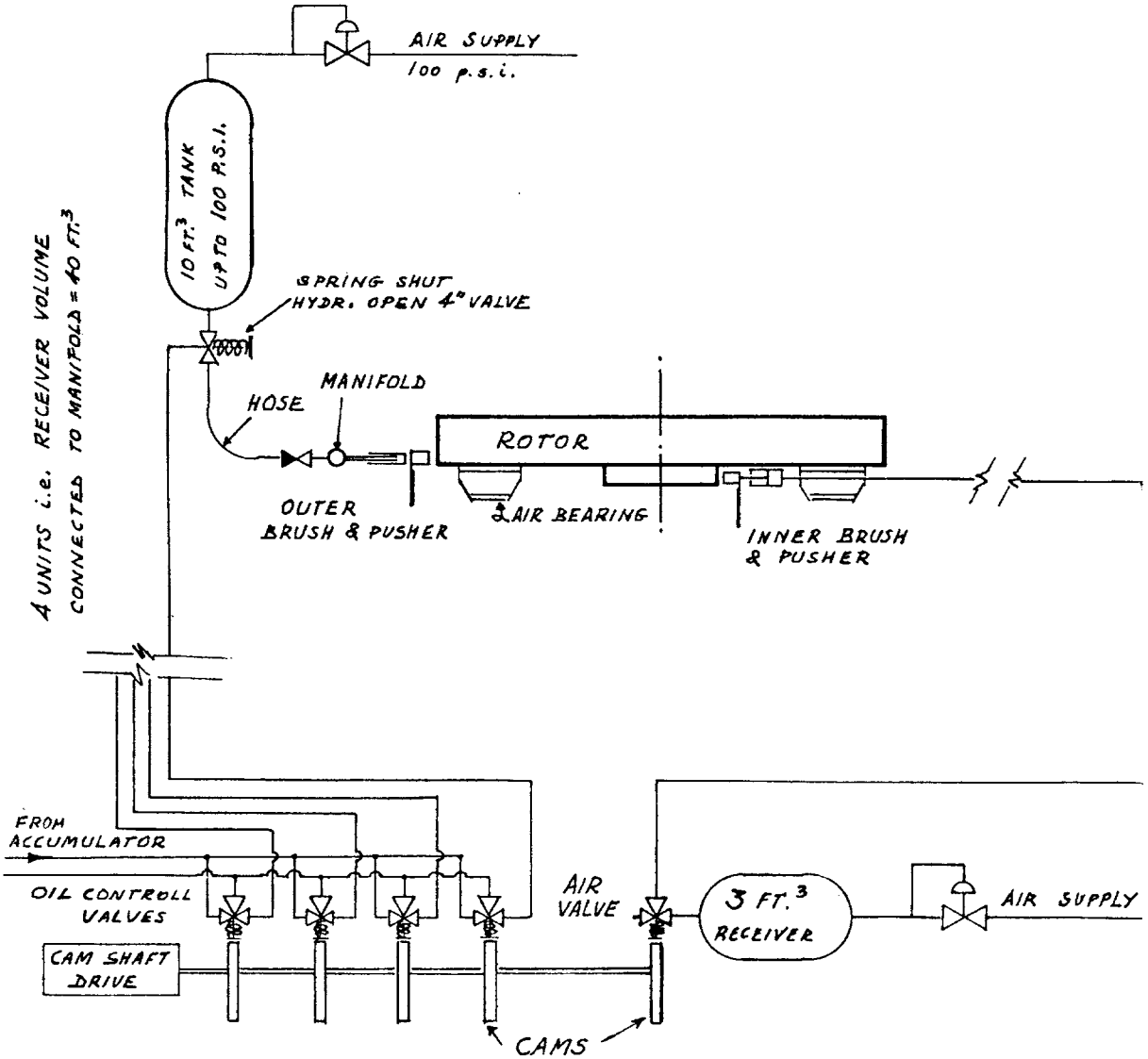

Figure 13. Air System for Actuating Outer Brushes

Another point about the design is that the top clamp blocks as well as enabling a good clamp joint between the brush mounting strips and series resistors, also act as a heat sink at the contact to reduce thermal loosening of the clamp screws.

Considering now the other positions; number 2 will be virtually the same as 7, but the situation is different for positions 3 and 6. Here there is only about half the rotor width available where the voltage gradient is acceptable. If however, this limiting gradient could be doubled in some way, then about twice as much rotor rim is available. This can be seen from Figures 9 and 10. The obvious way to do this is to halve the width of the brushes, since it is voltage difference across the brush that is important, not the gradient as such. In reducing brush width, it is

desirable not to reduce brush area so the nominal current densities are kept the same and linear wear rates are not increased. A way in which this might be done is shown in Figure 12d. Each resistor strip now would handle only half the current and would only need to be half as thick for the same temperature rise. The same length would be required however and there is not much room for the bottom resistors. The mounting strips could be pressed into service in this case, because of the current in each one being halved. This tends to make the heating problems easier by a factor of 4.

Other factors involved are that because of the loop between the leads, inductive effects could cause poor distribution of current when the rate of change of pulse current with time is large. Pinch forces on the leads must be re-examined. It is probable that the cost of a half brush would not be very different from a full one. This would mean greater brush replacement cost due to wear. This could be eased however, by using the half brushes only where the gradient is above 0.2 V per cm, brush units then being half with full brushes, and half with half brushes.

Another possible solution would be to run the brushes on the narrower band and water-cool the rotor surface during a pulse. This is discussed in chapter 7.

6. CALCULATION OF ROTOR SURFACE TEMPERATURE

The calculation of temperature in and at the surface of a slab for an arbitrary heat input with respect to time can be arduous. The method used is that described by Dusinberre (ref. 2) which is very simple and quite accurate. The accuracy of the method is not discussed here, but it has been examined by comparing it with exact solutions for constant heat input rates. The increments and parameter values used have all been justified in this way for our specific problems and these compare well with those indicated by Dusinberre for similar conditions.

It is assumed that our problem is that of the semi-infinite slab. Since heat penetrates into mild steel only about one centimeter in two seconds and the brush track is 6 cm wide, this assumption will be good over the centre half of the track. The track edges will be colder than the centre because the heat flow will diverge. It is the maximum temperatures that concern us, so this approach is reasonable.

The method consists of considering the solid to be divided into blocks with dimensions Δx in the x direction (perpendicularly into the solid from the surface) and Δx and unity in the y and z directions. Each of these blocks is then considered to be at a uniform temperature at all times. The heat balance for each element is then worked out for time intervals Δt and this enables the temperature of each block at the end of the interval to be simply found from the temperature of that block and its immediate neighbours at the beginning of the interval.

The results of this theory are as follows:

Consider the blocks to be numbered from the surface inwards, no. 1 at the surface, no. 2 the next in, and so on. These numbers are used as subscripts of T to denote the temperature of a particular block. Further, a dash is used with T to indicate temperature at the end of a time interval for a step in the calculations. No dash is used when the beginning of the time interval for that step is meant.

Thus:

T_1 is the temperature of block 1 at the beginning of time interval Δt, and T'_1 is the same at the end of the interval.

If ρ = density
c = specific heat
k = thermal conductivity

then the ratio $\dfrac{\rho \,.\, c.\, \overline{\Delta x}^2}{k.\ \Delta t}$ emerges and is put equal to M by definition. This method of analysis is only useful for integral values of M, which must also be equal to 2 or more. M = 3 is used in what follows.

The formula then becomes $\rho \,.\, c.\ \overline{\Delta x}^2 = 3k.\ \Delta t$. Therefore for a given material, if Δt is fixed, then so is Δx. In what follows $\Delta t = 0.2$ seconds Having decided that M = 3, then the equations relating temperatures of blocks become:

$$T'_1 = \frac{T_o + 2T_1 + T_2}{3}$$

$$T'_2 = \frac{T_1 + T_2 + T_3}{3}$$

$$T'_3 = \frac{T_2 + T_3 + T_4}{3} \qquad \text{etc.}$$

where $T_o = Q.\ \dfrac{\Delta x}{k}$

Q being the heat input per unit area per unit time.

It also turns out that the surface temperature, T_s is found from:

$$T_s = \frac{T_o}{2} + T_1$$

Returning now to the calculation of the rotor surface temperature during a pulse using the input of Figure 11.

a. Divide the curve into time intervals of 0.2 sec.
b. Write down the average power density for each interval.
c. Write down the values for Q in calories/sq. cm sec.
d. Calculate Δ x from the formula above $\left(\overline{\Delta x}^2 = \frac{3k.\ \Delta t}{\rho\ .c} \right)$

Assuming

$$t = 0.2 \text{ sec.}$$
$$k = 0.12 \text{ cal/cm } ^{o}\text{C sec.}$$
$$\rho\ .c = 0.85 \text{ cal/cu . cm } ^{o}\text{C}$$

Therefore

$$\overline{\Delta x}^2 = \frac{3 \times 0.12 \times 0.2}{0.85} = .0847 \text{ sq. cm}$$

Therefore

$$\Delta x = 0.291 \text{ cm}$$

e. Write down the values of T_o (= Q. Δ x/k) for each interval.
f. The analysis may now be done as shown in Table 1 (for tabulations of Q, T_o see Figure 11).

The temperature of each block is taken to be zero initially. The values of T_o are written into the table from Figure 11.

The calculation in Table 1 assumes that all the heat generated at or near the interface of brushes and rotor flows only into the rotor and is generated evenly over the surface, not at spots. An estimate of the effect of heat flow into the brushes may be made as follows. Assume that the rotor band is 1/6th filled with brushes which are $\frac{1}{2}$ cm thick (including backing plate, mounting strip etc.). The heat flows into the rotor a distance of about 1 cm up to the time of maximum temperature (from Table 1). Thermal conductivity of typical copper-graphite brush material is three times higher than for steel so it can be assumed that brush temperature is constant throughout the material at any one time. Noting also that volumetric specific heat is much the same for most metals including these brushes and also that if the heat rate input into a slab is changed, the depth of penetration is not changed for a given elapsed time. The temperature falls roughly linearly with distance into the slab also. Then the ratio of heat stored in the rotor to that which would have been stored in the brushes had they been included in the calculation is roughly

$$T_s \times 1/2 : T_s \times 1/2 \times 1/6 = 6 : 1$$

Thus the inclusion of the thermal capacity of the brushes would reduce the maximum surface temperature by about 1/6th. This would reduce the surface temperature rise of 180°C to about 150°C.

TABLE I.

$= \frac{T_0}{2} + T_1$ $\quad T_1' = \frac{T_0 + 2T_1 + T_2}{3}$ $\quad T_2' = \frac{T_1 + T_2 + T_3}{3}$

LINE	TIME (SEC)	T_S (°C)	$T_0/2$	T_0	STATION N.os (Δx = 0·291 CM) 1	2	3	4	5	6	7
1	0·2	21	21	41	41						
2	0·4	58	44	87	14 / 115	14					
3	0·6	82	44	87	38 / 168	5 / 43	5				
4	0·8	106	50	100	56 / 216	14 / 72	2 / 16	2			
5	1·0	130	58	116	72 / 284	24 / 101	5 / 30	1 / 6	1		
6	1·2	159	64	128	95 / 352	34 / 139	10 / 46	2 / 12	0 / 2		
7	1·4	179	62	121	117 / 401	46 / 178	15 / 65	4 / 20	1 / 5	1	
8	1·6	180	46	92	134 / 419	59 / 215	22 / 88	7 / 31	2 / 9	0 / 2	
9	1·8	172	32	63	140	72	29	10	3	1	

The effect of putting the brushes on at exactly the right time and not half a second early is also calculated (Table 2). The maximum surface temperature in this case is 152° reducing to 130° (when the brush thermal capacity is included).

TABLE 2.

$= \frac{T_0}{2} + T_1$ $\quad T_1' = \frac{T_0 + 2T_1 + T_2}{3}$ $\quad T_2' = \frac{T_1 + T_2 + T_3}{3}$

LINE	TIME (SEC)	T_s (°C)	$T_0/2$	T_0	STATION Nos (Δx = 0·291 CM) 1	2	3	4	5	6	7
1	0·2	50	50	100	100						
2	0·4	91	58	116	33 / 182	33					
3	0·6	125	64	128	61 / 261	11 / 72	11				
4	0·8	148	61	121	87 / 319	24 / 115	4 / 28	4			
5	1·0	152	46	92	106 / 342	38 / 153	9 / 48	1 / 10	1		
6	1·2	146	32	63	114	51	16	3	0		

7. THERMAL STRESS CYCLING IN ROTORS DUE TO BRUSHES

If a mild steel bar is constrained at its ends so that it cannot expand lengthwise, then if the bar's temperature is raised 100°C it will reach its yield point in compression assuming:

Thermal coefficient of expansion	=	12×10^{-6} per °C
Yield strength	=	16 t.s.i.
Young's modulus	=	30×10^{6} p.s.i.

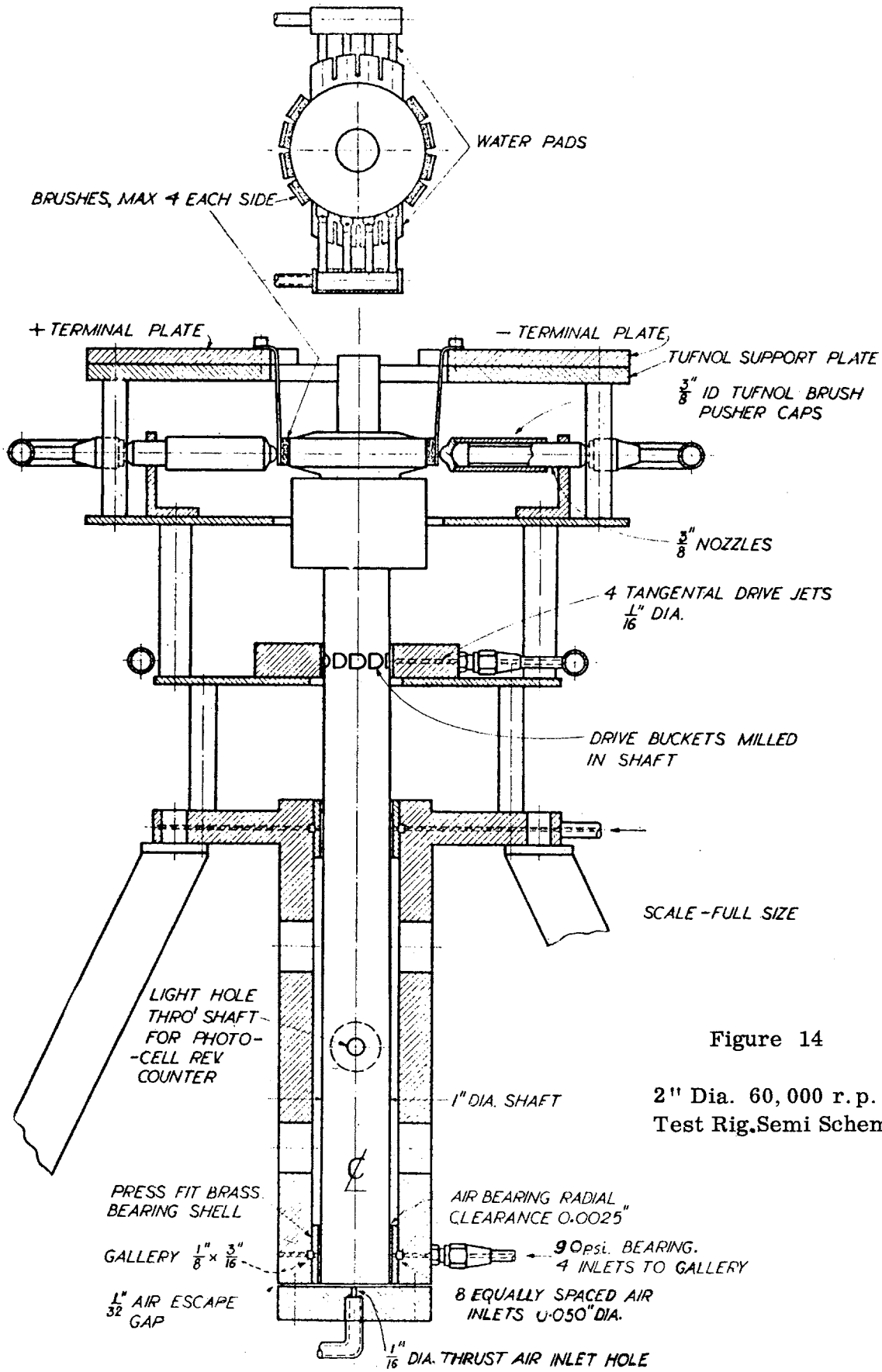

Figure 14

2" Dia. 60,000 r.p.m. Test Rig. Semi Schematic

If now the bar is also similarly constrained in one of its other two dimensions (consider it to be a square bar) then it need only be raised 70°C to cause it to reach yield point, assuming

Poison's ratio = 0.3

If the first bar with one constraint were initially raised to yield point in tension, then it would take a 200°C temperature rise to bring it to yield in compression. Similarly the other bar would require a rise of 140°C.

If such a bar as those postulated above were heated and cooled periodically, then each heating-cooling cycle would constitute one cycle towards its failure time in fatigue.

Considering now the metal in the surface of a homopolar generator rotor where the brushes run. This is constrained very well in a circumferential direction. It cannot expand when heated without moving radially outwards. This is not possible because the rest of the rotor prevents it. It is constrained against thermal movement radially not at all, and in the axial direction it is constrained "quite well". Heat penetrates 1 cm in during the pulse and the heated band is six times as wide as this. This would give considerable restraint. The exact amount of this is not required however as without this knowledge, it is possible to say that the temperature rise in the brush track to cause yield is between 70 and 100°C, very likely (and conservatively) nearer to the former value, for an initially unstressed rotor. Similarly for a rotor rim initially at yield in tension, the temperature rise to reach yield in compression is between 140°C and 200°C.

Taking the case of a pulse giving a surface temperature rise of 150°C (Table 1 value less one sixth for brush thermal capacity) for an initially unstressed rotor, what would happen would be that at a temperature rise of 70°C, yielding would begin and continue until maximum temperature rise of 150° is reached. On cooling, when the surface temperature rise drops back to 80°C, the stress will be zero and as the rise falls to zero the surface stress will be near yield in tension. On subsequent pulses, the stresses start from tension yield, go to compression yield and fall back to the original state. Inspection of the curve (ref. 4) which shows endurance cycles to fracture vs. strain range, shows that for the above range of stress (equal to ± 0.1% strain) cracks should not be expected to appear before 200,000 pulses. This would be quite acceptable. If surface craze-cracking should occur then (or before, if heating is not uniform on the brush track as assumed) then the situation is still safe. Frost (ref. 5, p 816) has shown that cracks will not propagate in notched mild steel bars if the alternating stress is less than about ± 5 t s i. The stress at the rims of the generator's rotors at full speed is 2 t s i, giving a centrifugal stress range of +0 to -2 t s i which is well under that limit. The conditions of Frost's tests are quite different from ours in that he was dealing with the effects of single cracks. If we get cracking, it will consist of many fine cracks close together. We have observed these in tests using our 2 in. dia. 60,000 r.p.m. test rotor (Figure 14). This may approximate to other experiments of Frost's (ref. 5, p 817-818) in which the alternating stress required to propagate a small crack was ± 11 t s i, which makes it safer still. Cracks formed thermally on the rotors would therefore be expected

to propagate out of the area of thermal stress and halt near where the centrifugal stress is dominant, a depth of about half cm.

A danger of such cracks could be if they ran into each other and allowed pieces of metal to fling off the rotor. This is quite unlikely as cracks would be expected to avoid each other since a crack in an area relieves the stress there and other cracks would not be expected to grow into that area. This fact that cracks have a strong tendency to avoid each other, has been observed on our 2 in. rotors, on which more tests will be made to test these points more specifically.

The endurance limit for mild steel is given as $\pm$ 13 to $\pm$ 15 t s i. This is the alternating stress range below which fatigue failure does not occur (for tens of millions of cycles at any rate). If we take the average of these, we get an endurance limit total range of 28 t s i. Subtracting 2 t s i from this for the centrifugal stress total range leaves 26 t s i. The temperature rise to give this stress range is 115° to 160°C depending on the restraint. If the temperature rise during a pulse can be kept near the lower limit, then thermal crazing of the rotor surfaces may never occur, no matter how many pulses are taken from the generator. This is considered in the next chapter.

8. THE ALLEVIATION OF THERMAL STRESSES

There are numerous ways in which the temperature on the rotor rim under the brushes during a pulse could be reduced, thus reducing the thermal stress there. Some of these are practical and some less so.

If the heat conduction from the surface could be increased this would help. This could be achieved if the brushes could be run on a band of copper on the rim, but it would have to be about 1 cm thick and the prospect of keeping this in place is not inviting. Imagine what would happen if it were to start peeling off during a pulse!

Another way would be to cool the surface of the rotor during a pulse. Blasting the surface with air might help. This has been looked at briefly and does not look very promising because of the low heat capacity of gasses per unit volume. However cooling with water that is held in place on the rotor surface with hovering pads would be very effective. The difficulty with this (not counting the messiness of having water around the machine) is the fact that brushes then want to glide on the water film that clings to the rotor and will not carry current. We have done many experiments on this problem using the 2 in. test rig and of many variations tried only one worked consistently and it carried current very well. This was when the rotor had a thread cut on the brush track. This thread was a two start (to preserve rotor balance) square thread with 1 mm lands and 1 mm grooves and with grooves 1 mm deep. Some hundreds of pulses were conducted with currents up to 2,000 amps per sq. cm brush in which contact volt drop was normal, rotor surface was undamaged, and friction was found to be reduced by a factor of two over that for dry pulses. It is possible that it would not work on the generator rotors because the centrifugal acceleration on this surface is 70 times less than on the 2 in. rotor

If centrifugal fling-off were a dominant factor, then it probably would not. This method looks promising, but more would have to be done before it could be considered a reasonable proposition.

The most direct way of achieving this reduction of temperature is to reduce the heat input flux and this could be achieved in two ways. The first is by spreading the same total heat over a larger surface area of the rotor. This could be done for discs A and D by using the half width brushes to increase the limiting voltage gradient in the rotor to 0.4 V per cm but since these brushes are required to bring the track widths on discs B and C up to that of A and D with full width brushes, then to get an improvement for these discs, quarter width brushes would have to be used there. This is not a very inviting thought from a mechanical point of view.

Another way of doing the same thing would be to reduce the voltage gradient on the rotor rims by reducing fringing flux. This could be done by magnetic shielding or by shaping the rotor surface in some way. Another point to be kept in mind is that the limiting voltage gradient on which brushes will run (arrived at in chapter 3) may be conservative. If the limit were 0.4 V per cm and not 0.2, then the situation would be improved by the same factor of 2.

The second method is to reduce heat input by reducing contact volt drop or by reducing brush friction input. Contact volt drop is probably about as low as can be expected now, gratifyingly so in fact. This leaves friction reduction, and this must be accomplished without nullifying the effect with consequent increase in volt drop. Experiments have shown that if brush load is halved (say) contact volt drop might be expected to increase by 10% which would still leave a worthwhile saving. Tables 3 and 4 show the temperatures if the friction component of the heat input is reduced to half over that shown in Figure 8, Table 3 being for brushes on half a second early, and Table 4 for brushes on at exactly the right time. Maximum temperature rises in these cases being respectively 141° and 126°C, or taking brush thermal capacity into account, about 120°C and 105°C respectively.

Thus if brush load can be reduced to 4 lb each and the brushes are put on half a second early, then the temperature rise equals the limit for no cracking of the rotor. Another important aspect of this halved brush load is that brush wear would be halved (chapter 2) thus doubling brush life and halving brush cost. It has yet to be established what the running conditions of brushes are on a 12 ft. dia. rotor. We know that they run better on an 18$\frac{1}{2}$ in. rotor than on a 2 in. rotor and it is likely that this trend continues in the same direction.

Another way to reduce thermal stress for a given temperature would be to machine the rotor rims in such a way that little axial restraint existed. A helical groove on the brush track with about 1 cm pitch x 1 cm deep x 1 mm wide would do this. This would raise the yielding temperature rise near to the higher value. Such a groove would have some beneficial effect on brush behaviour but would have the disadvantage of decreasing heat flow area in the rotor by 10% (for the dimensions given above) and it also might introduce undesirable effects due to fringing field at the groove edge.

TABLE 3.

$= \frac{T_0}{2} + T_1$ $\quad T_1' = \frac{T_0 + 2T_1 + T_2}{3}$ $\quad T_2' = \frac{T_1 + T_2 + T_3}{3}$

LINE	TIME (SEC)	T_S (°C)	$T_0/2$	T_0	STATION N.os (Δx = 0·291 CM)						
					1	2	3	4	5	6	7
1	0·2	10	10	20	20						
2	0·4	29	22	44	7/58	7					
3	0·6	41	22	44	19/84	2/21	2				
4	0·8	57	29	58	28/121	7/36	1/8	1			
5	1·0	81	41	81	40/173	12/55	3/15	0/3			
6	1·2	110	52	103	58/237	18/81	5/24	1/6	1		
7	1·4	132	53	106	79/291	27/114	8/37	2/10	0/2		
8	1·6	141	44	87	97/319	38/147	12/53	3/16	1/4	1	
9	1·8	136	30	59	106	49	18	5	1	0	

TABLE 4.

$= \frac{T_0}{2} + T_1$ $\quad T_1' = \frac{T_0 + 2T_1 + T_2}{3}$ $\quad T_2' = \frac{T_1 + T_2 + T_3}{3}$

LINE	TIME (SEC)	T_S (°C)	$T_0/2$	T_0	STATION Nos (Δx = 0·291 CM)						
					1	2	3	4	5	6	7
1	0·2	29	29	58	58						
2	0·4	60	41	81	19 / 119	19					
3	0·6	92	52	103	40 / 189	6 / 46	6				
4	0·8	116	53	106	63 / 247	15 / 80	2 / 17	2			
5	1·0	126	44	87	82 / 278	27 / 115	6 / 34	1 / 7	1		
6	1·2	123	30	59	93	38	11	2	0		

The most profitable course to pursue will best be decided after tests on the generator have been made to determine brush behaviour at full scale and the effect of voltage gradient.

9. THE EFFECT OF ROTOR REVERSAL

As the rotors come to rest and move off in the opposite direction certain points on the rotors will experience worse thermal conditions than others. The worst treated points will be those that are under the trailing end of a brush unit at the instant of zero motion, (the trailing end being that which passes points on the rotor last during the time before that instant).

If the deceleration through zero is a and a brush unit length is s (s = 6 in. as shown in Figure 12), then the worst point will have brushes in contact with it for a time $2\sqrt{2\,s/a}$ (call this maximum contact time). In the classical pulse, current is 1.4×10^6 amp at zero speed, i.e., 1,600 amps per brush. Contact volt drop at this current is 0.5 V. Heat input rate is therefore 1.6 x 0.5 kW/brush. For brushes 0.5 in. circumferentially and 1 cm axially and assuming a brush unit to have no space between the brushes, then heat input rate at the brush-rotor interface is 1.6 x 0.5 x 0.397/0.5 = 0.64 kW per sq.cm. The brush material CMO has a thermal conductivity of 0.3 cal. per sec. ^{o}C cm which is $2\frac{1}{2}$ times better than mild steel and a volumetric specific heat of 0.6 which is $1\frac{1}{2}$ times worse. Assuming that for a time equal to max. contact time, the trailing brush is in contact with the same bit of rotor (the actual situation will be better than this because most of the rotor that this brush sees during this time will be colder than that assumed). Consider an area of 1 sq.cm and that heat flow is one dimensional. The distance penetrated by heat in time t

$$= x = \sqrt{2kt/\rho c}$$

The heat put in in time t $= Qt = \rho c \times T/2$

where Q is the heat input rate per unit area, and

T = surface temperature reached in time t.

then $Q = \rho c \times T/(2t)$

$$= \sqrt{\rho c k} \cdot \frac{T}{\sqrt{2t}}$$

This formula may now be applied to rotor and brush

$$Q \text{ rotor} = (\sqrt{\rho c k}) \text{ rotor} \cdot \frac{T}{\sqrt{2t}}$$

$$Q \text{ brush} = (\sqrt{\rho c k}) \text{ brush} \cdot \frac{T}{\sqrt{2t}}$$

Adding,

$$Q \text{ total} = \{ (\sqrt{\rho c k}) \text{ rotor} + (\sqrt{\rho c k}) \text{ brush} \} \cdot \frac{T}{\sqrt{2t}}$$

Now $(\rho c k)$ rotor $= (0.32)^2$ cal^2/cm^4. ^{o}C^2. sec

and $(\rho c k)$ brush $= (0.42)^2$ cal^2/cm^4. ^{o}C^2. sec

$$Q \text{ total} = 0.64 \text{ kW/cm}^2 = 160 \text{ cal/cm}^2 \text{ sec.}$$

Therefore

$$T = \sqrt{2t} \times \frac{160}{0.74} = 306\sqrt{t} \quad {}^{o}C$$

Now the deceleration of the rotor at zero speed for the classical pulse is 2,800 ft/sec^2. Therefore for s = 6 in., t = .038 sec. Therefore T = 60°C.

This could be a little too high since it must be added to the surface temperature already reached at the moment of reversal. The best that can readily be done to improve this is to reduce s in the above to the circumferential length of one brush. This is a reduction of 12 over the length of a unit. This would reduce max. contact time by $\sqrt{12}$ and reduce the above temperature by a factor of $(12)^{\frac{1}{4}}$, i.e., 1.87 giving an extra temperature due to reversal of 32°C. This last value would probably be improved in practice by a factor of about 2 because heat flow in the rotor would not be one dimensional as assumed but three dimensional. The value of 60° would also be lower because heat flow in the rotor in this case would be two dimensional.

Another factor in this reversal calculation is that the assumption of uniform conditions under the brush is probably not very good at these very low speeds. Experiments with the original fully guided brushes on the 18½ in. rig in which the rotor was rotated back and forth by hand to simulate reversal showed burning of the rotor. However with self aligning brushes no burning was observed. This is another point in favour of the latter type of brush.

An immediate conclusion to be drawn from the above is that adjacent brush units should follow clear of each other and not run on the same or in overlapping tracks. It may be necessary also to think of altering brush units to make a brush unit only 1 brush long if the calculated gain of about 2 seems worthwhile.

10. BRUSH DESIGN FOR POSITIONS 1 and 8

Discussing first the mechanics of these brushes, the specifications for these are virtually the same as those for the outside brushes with the exception that because of the reduced rubbing speed, brush lightness is not so important; for the same reason one pusher may be made to serve a cluster of brushes; and because friction heating is smaller than V x I heating the brushes can be pushed on early, making speed of action not so important.

Other factors that make the design inside different from the outside are:

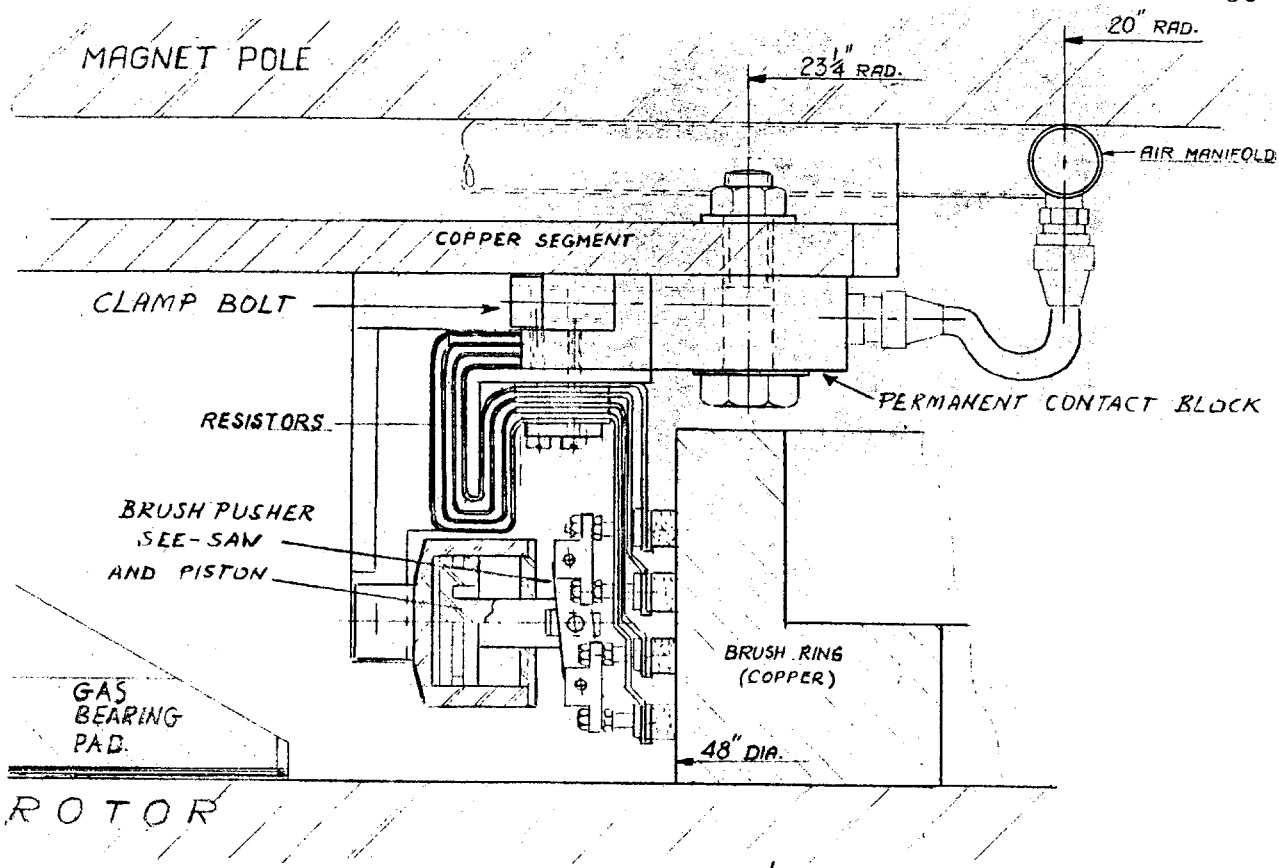
MAGNET POLE
20" RAD.
23¼" RAD.
AIR MANIFOLD
COPPER SEGMENT
CLAMP BOLT
PERMANENT CONTACT BLOCK
RESISTORS
BRUSH PUSHER
SEE-SAW
AND PISTON
BRUSH RING
(COPPER)
GAS
BEARING
PAD.
48" DIA.
ROTOR

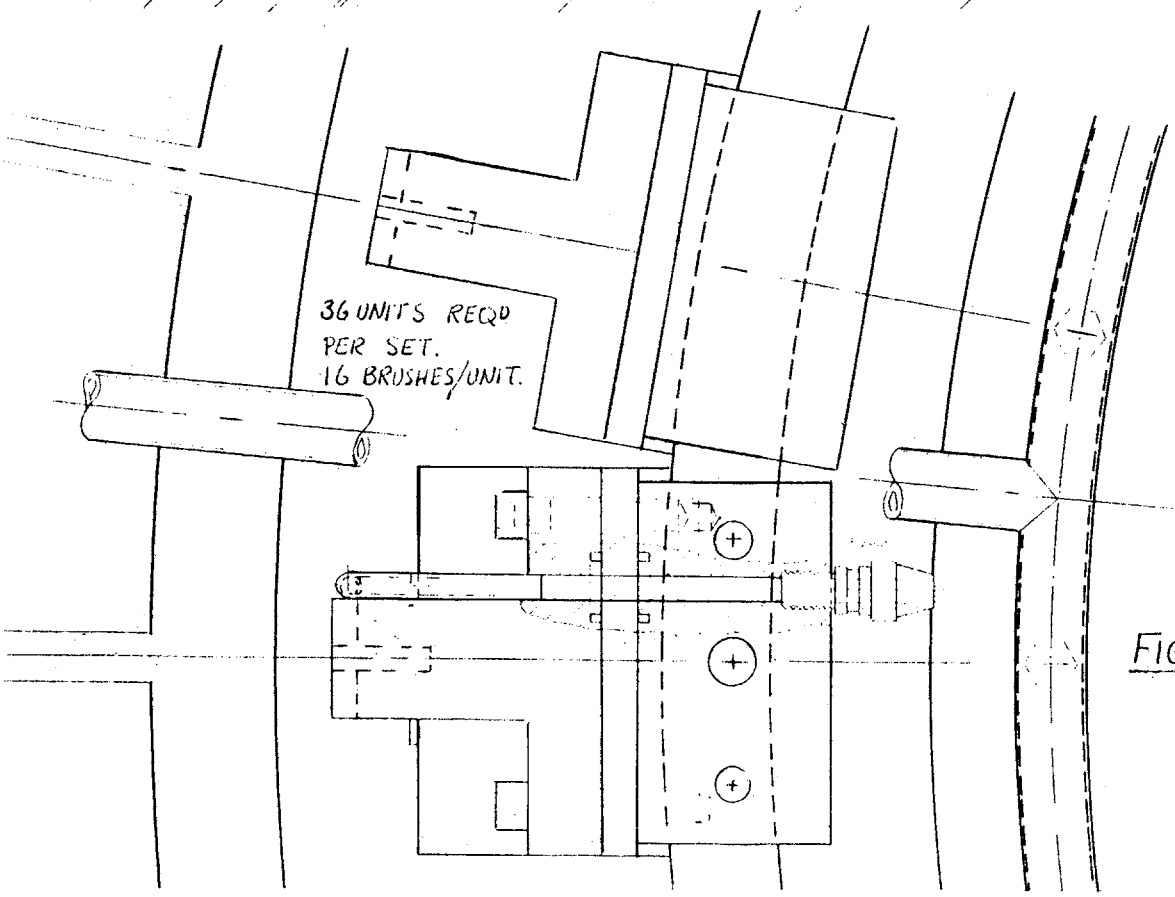
36 UNITS REQD
PER SET.
16 BRUSHES/UNIT.

FIG. 15.

- Because supplying air for pushers in there is not so simple as for outside, a non-leaky system has been chosen.
- Because the slip ring circumference is 1/3 that of the rotor, several bands of brushes must be used to get comparable current densities.
- Because several bands must be used and vertical height is limited, brush mounting strips cannot be supported easily from both ends. Cantilever strips are therefore used.
- Because accessibility is limited, they should be designed conservatively and for long life. This is why four rows of brushes are used and not two. (Three rows are harder to use with load equalizing see-saw pushers.)
- Because brush units should be removable without removing the rotors they should be designed to come out through the webs in the air bearing pads. They are designed to unscrew, tip on their backs and slide out.
- The air supply has been designed to connect up automatically when the clamp volts are done up. Hoses would not be manageable in there.
- The electro magnetic forces are larger because the vertical field is the full 16,000 gauss and the pinch field is 5,100 gauss at full current. The mounting strips must be able to cope with these and yet be flexible. The pinch forces are designed to be taken by the outer brush mounting strips pushing in onto the inner ones and the upper brushes.
- Because of the larger forces and the fact that cantilever brush mounting strips are used the brush length in the direction of rubbing has been increased to 7/8 in. This unfortunately reduced the number of brushes, but should give a workable compromise.

For the drawing of the inside brushes, see Figure 15. Number of units required per position is 36 with 16 brushes each making a total of 576 brushes. Peak current per brush during a classical pulse is 2,800 amps.

Considering now the heating due to friction and contact volt drop. Assume a load of 4 lb per brush - contact volt drop at 2,800 amps of 0.6 V (experimental value for CMO on copper obtained using 2 in. rig); coefficient of friction of 0.2; brush width on slip ring 6 cm; slip ring circumference 370 cm.

Friction power at full speed

$$= 576 \times 4 \times 0.2 \times \frac{550}{3} \text{ ft.lb per sec.}$$

$$= 0.05 \text{ kW per sq.cm of slip ring}$$

Contact volt drop heating at peak current

$$= 1.6 \times 10^6 \times 0.6/1000 \text{ kW total}$$

$$= 0.43 \text{ kW per sq. cm of slip ring}$$

Figure 16 shows these results plotted and the tabulation required for calculating slip ring temperature

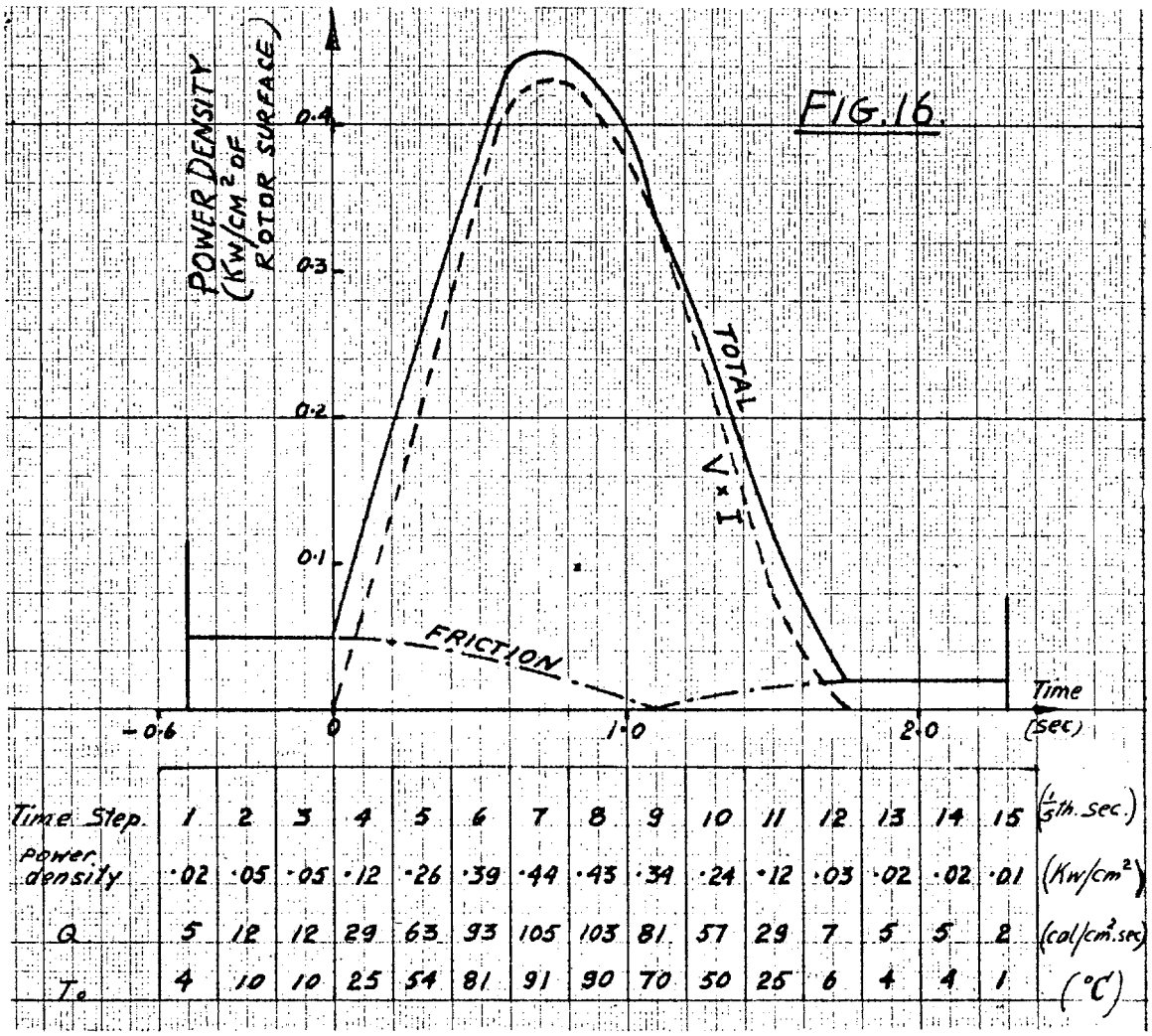

Time Step	1	2	3	4	5	6	7	8	9	10	11	12	13	14	15	(1/5th. sec.)
Power density	·02	·05	·05	·12	·26	·39	·44	·45	·34	·24	·12	·03	·02	·02	·01	(Kw/cm²)
Q	5	12	12	29	63	93	105	103	81	57	29	7	5	5	2	(cal/cm².sec)
T_o	4	10	10	25	54	81	91	90	70	50	25	6	4	4	1	(°C)

To calculate the maximum temperature of the slip ring surface, take copper to have the following properties:

$$\rho \cdot c = 0.84 \text{ cal/cubic cm. } ^{\circ}\text{C}$$

$$k = 0.94 \text{ cal/cm. } ^{\circ}\text{C. sec.}$$

As before take

$$\Delta t = 0.2 \text{ sec}$$

$$M = 3$$

Then

$$\overline{\Delta x}^2 = \frac{3k \cdot \Delta t}{\rho \cdot c} = 0.67 \text{ cm}^2$$

$$\Delta x = 0.82 \text{ cm}$$

Also

$$T_o = Q \cdot \frac{\Delta x}{k} = .87\ Q$$

The calculation is given in Table 5.

Further, the slip ring is about 3 cm thick, so the calculation need only be taken to 4 increments of Δx.

For the fourth increment $T'_4 = \dfrac{T_3 + 2T_4}{3}$

From Table 5 it will be seen that the maximum temperature of the slip ring surface is 115°C. This is reasonable. In this case, the thermal capacity of the brushes will help more than on the rotor rims, because the surface is more than half covered, but CMO thermal conductivity is only one third that of copper offsetting this gain. Thermal stressing is not such a problem here because the slip ring is barely constrained vertically and not fully constrained circumferentially because it is a ring and not a disc.

11. BRUSH DESIGN FOR POSITIONS 4 and 5

As discussed in chapter 4, there are two possible ways to arrange brushes for between the rotors, to use slip rings and brushes similar to those for positions 1 and 8, or to use many small brushes that run directly on the rotor surfaces mounted in such a device as shown in Figure 17.

Each of these ways has a basic advantage and disadvantage. The slip ring system has the advantage that brushes run on a renewable surface, but has the disadvantage that slip rings must be clamped to the rotors in limited space. The slide-out unit has the disadvantage that the brushes run directly on the rotors which are quite highly stressed centrifugally there (6 t s i), but has the advantage that it is readily slid in and out.

TABLE 5

$= \frac{T_0}{2} + T_1$ $\quad T_1' = \frac{T_0 + 2T_1 + T_2}{3}$ $\quad T_2' = \frac{T_1 + T_2 + T_3}{3}$ $\quad T_4' = \frac{T_3 + 2T_4}{3}$

LINE	TIME (SEC)	T_S (°C)	$T_0/2$	T_0	STATION N.os (Δx = 0·82 CM)				
					1	2	3	4	
1	0·2	2	2	4	4				
2	0·4	6	5	10	1 12	1			
3	0·6	9	5	10	4 18	0 4			
4	0·8	18	12	25	6 38	1 7	1		
5	1·0	40	27	54	13 82	2 15	0 2		
6	1·2	68	41	81	27 140	5 33	1 6	1	
7	1·4	93	46	91	47 196	11 60	2 13	0 2	
8	1·6	110	45	90	65 240	20 89	4 25	1 6	
9	1·8	115	35	70	80 260	30 118	8 40	2 12	
10	2·0	112	25	50	87	39	13	4	

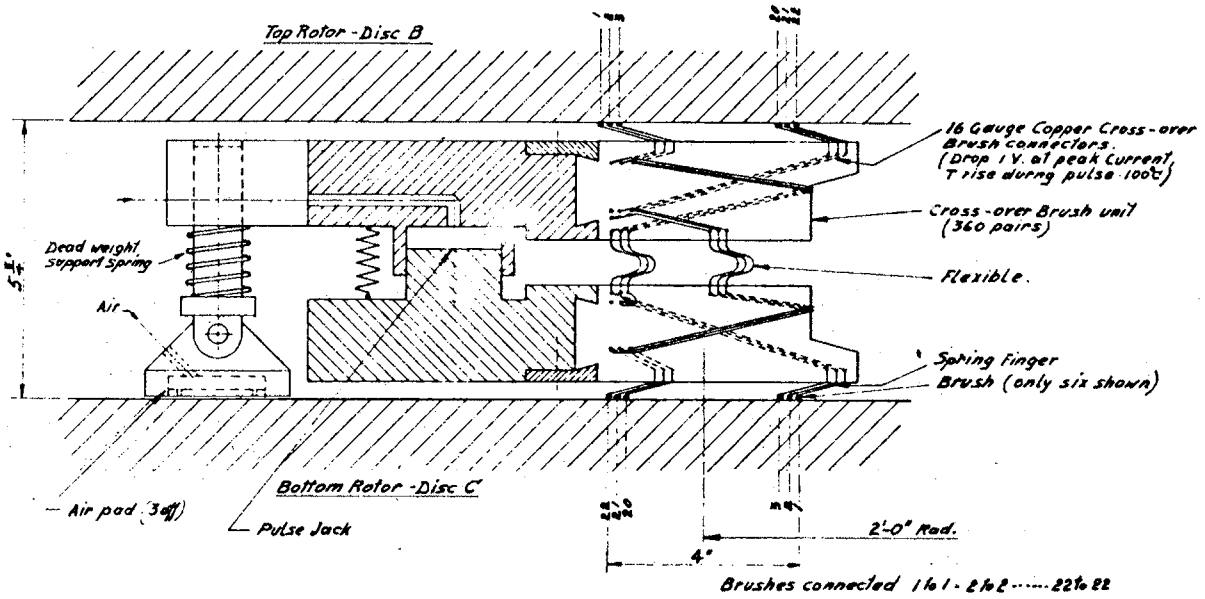

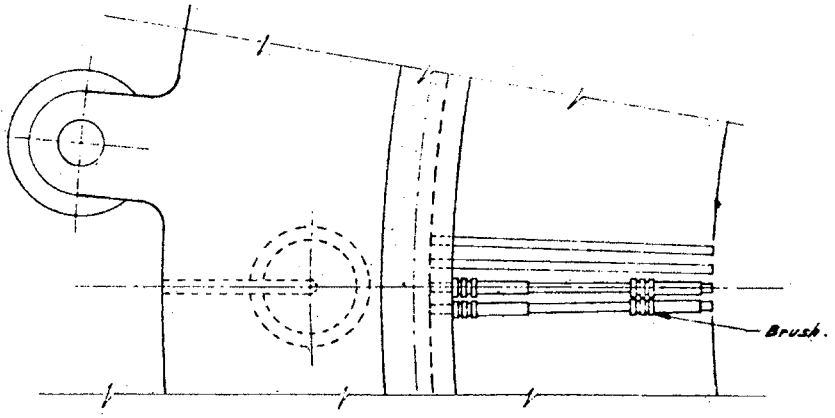

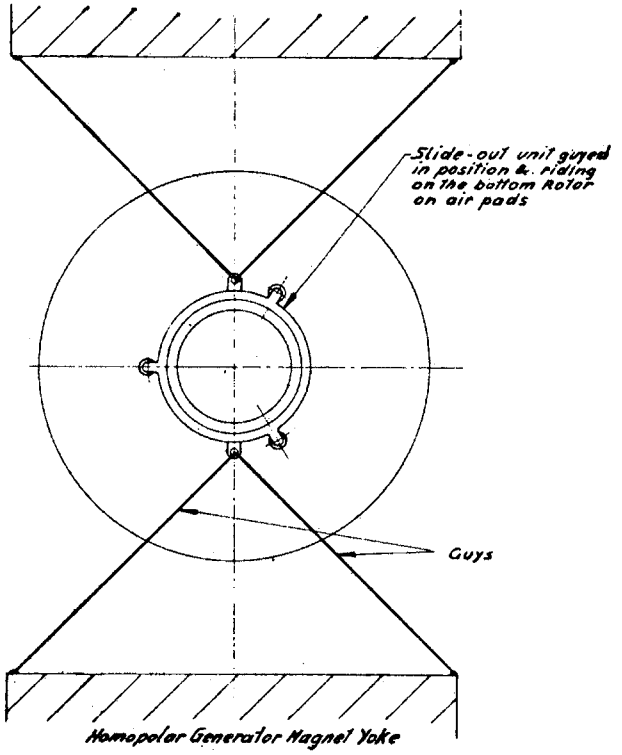

Figure 17.

Slide-Out Brush Unit for Positions 4 & 5

The major consideration however, is that of the thermal loading of the surfaces. In the slip ring system, it is not likely that more than two rows of brushes can be run on a band 1 in. or so wide on each ring. This would double the heat input curve of Figure 16 and give twice the temperature rise, namely 230°C.

The form the slip-out unit might take is shown in Figure 17. Each brush must run on a voltage gradient of 1 V per cm so to enable the limit of 0.2 V across the brushes, they can only be 0.080 in. wide. There is room to put in brushes 3/8 in. long in the direction of motion. As shown in the figure all the brushes are jacked onto the rotor by the one mechanism and the load is shared between brushes by means of the spring fingers. This is rather "second hand" but may be acceptable because of the large number of brushes over which averaging can be made.

Thermal loads on the rotor may now be found assuming the following: number of brushes = 360 x 22 = 7,920, giving maximum current 200 amps per brush, giving contact volt drop 0.15 (from Figure 8); 0.5 lb load per brush; width of brush band on rotor 4 in. giving an area of 3,900 sq.cm; coefficient of friction 0.2.

Friction heat input = 7,920 x 0.5 x 0.2 x 550/3 ft.lb per sec.

= 0.051 kW per sq.cm of rotor surface at full speed.

Contact volt drop heat input = $1.6 \times 10^6 \times 0.15/1000$ kW

= 0.062 kW per sq.cm at peak current.

These values are about half those given for the outside brushes position 7, so the temperature rise will be about half, namely about 70°C. Tests will also be conducted to find the behaviour of such brushes as these. Brush load required may be smaller than a half pound which would reduce heating still further.

Which of these two alternatives is adopted will depend on the results of further tests. It is possible also that each system will have to be designed completely to enable the relative advantages and costs to be assessed.

12. FURTHER TESTS

The next tests to be made will be on thermal fatigue using the 2 in. rig. The rotor will be shaped as shown in Figure 14. The taper shown gives nearly constant flow area for heat from the rim to enable surface temperature to be calculated readily. There is also a minimum of axial restraint to thermal stress. The aim will be to test the theory given in chapter 6 and to see if average temperatures can in fact be used in such calculations or if hot spots control surface-brush behaviour.

Tests will also be carried out to find the behaviour of brushes on copper under the conditions required for the position 4 and 5 slip ring system, and also for small brushes on steel as required for the slide-out unit.

The main test of brushes is the forthcoming quarter-machine test which will be similar to the pulse tests using NaK (ref. 6) except that brushes will be used, current will be drawn from the bottom-most disc (D) and the bottom rotor will be supported on an air bearing.

As a preliminary to the quarter machine tests, tests will be conducted in the homopolar generator to find the load required to give non-sparking contact for the brushes and also to check the theory of chapter 3 on what is likely to be the limiting voltage difference that can be permitted across a brush.

REFERENCES

1. BLAMEY, J.W.: "The Orbital Magnet and Power Supply of the 10 GeV Proton Synchrotron at The Australian National University," CERN Symposium on High Energy Accelerators, 1956.

2. DUSINBERRE: Numerical Analysis of Heat Flow (McGraw Hill, 1949).

3. SKETCH, SHAW and SPLATT: "A New Method for Observing the Phenomena of Commutation," Proceedings of the Institution of Electrical Engineers, Part A, Vol. 107, pp 336-9, 1960.

4. FORREST, P.G.: "Recent Research on Fatigue in Metals," Journal of the Institution of Mechanical Engineers, U.K., p 153, March, 1961.

5. FROST, N.E.: "A Relation between the Critical Alternating Propagation Stress and Crack Length for Mild Steel," Proceedings of the Institution of Mechanical Engineers, Vol. 173, No. 35, 1959.

6. BLAMEY, J.W., CARDEN, P.O., HIBBARD, L.U., INALL, E.K., MARSHALL, R.A., OLIPHANT, M.L.E.: "The Large Homopolar Generator at Canberra - Initial Tests," Nature, Vol. 195, No. 4837, pp 113-114, July 14, 1962.

7. MARSHALL, R.A.: "Tests with Solid Brushes on the Canberra Homopolar Generator," Nature, Vol. 204, No. 4963, p 1079, December 12, 1964.

8. MARSHALL, R.A.: "The Design of Brush Gear for High Current Pulses and High Rubbing Velocities," I.E.E.E. Transactions on Power Apparatus and Systems, Vol. PAS-85, No. 11, pp 1177-88, November, 1966.

Publications by Department of Engineering Physics

No.	Author	Title	First Published	Re-issued
EP-RR 1	Hibbard, L. U.	Cementing Rotors for the Canberra Homopolar Generator	May, 1959	April, 1967
EP-RR 2	Carden, P. O.	Limitations of Rate of Rise of Pulse Current Imposed by Skin Effect in Rotors	Sept., 1962	April, 1967
EP-RR 3	Marshall, R. A.	The Design of Brushes for the Canberra Homopolar Generator	Jan., 1964	April, 1967
EP-RR 4	Marshall, R. A.	The Electrolytic Variable Resistance Test Load/Switch for the Canberra Homopolar Generator	May, 1964	April, 1967
EP-RR 5	Inall, E. K.	The Mark II Coupling and Rotor Centering Registers for the Canberra Homopolar Generator	Oct., 1964	April, 1967
EP-RR 6	Inall, E. K.	A Review of the Specifications and Design of the Mark II Oil Lubricated Thrust and Centering Bearings of the Canberra Homopolar Generator	Nov., 1964	April, 1967
EP-RR 7	Inall, E. K.	Proving Tests on the Canberra Homopolar Generator with the Two Rotors Connected in Series	Feb., 1966	April, 1967
EP-RR 8	Brady, T. W.	Notes on Speed Balance Controls on the Canberra Homopolar Generator	Mar., 1966	April, 1967
EP-RR 9	Inall, E. K.	Tests on the Canberra Homopolar Generator Arranged to Supply the 5 Megawatt Magnet	May, 1966	April, 1967

No.	Author	Title	First Published	Re-issued
EP-RR 10	Brady, T.W.	A Study of the Performance of the 1000 kW Motor Generator Set Supplying the Canberra Homopolar Generator Field	June, 1966	April, 1967
EP-RR 11	Macleod, I.D.G.	Instrumentation and Control of the Canberra Homopolar Generator by On-Line Computer	Oct., 1966	April, 1967
EP-RR 12	Carden, P.O.	Mechanical Stresses in an Infinitely Long Homogeneous Bitter Solenoid with Finite External Field	Jan., 1967	
EP-RR 13	Macleod, I.D.G.	A Survey of Isolation Amplifier Circuits	Feb., 1967	
EP-RR 14	Inall, E.K.	The Mark III Coupling for the Rotors of the Canberra Homopolar Generator	Feb., 1967	
EP-RR 15	Bydder, E.L. Liley, B.S.	On the Integration of "Boltzmann-Like" Collision Integrals	Mar.,1967	
EP-RR 16	Vance, C.F.	Simple Thyristor Circuits to Pulse-Fire Ignitrons for Capacitor Discharge	Mar.,1967	
EP-RR 17	Bydder, E.L.	On the Evaluation of Elastic and Inelastic Collision Frequencies for Hydrogenic-Like Plasmas	Sept.,1967	
EP-RR 18	Stebbens, A. Ward, H.	The Design of Brushes for the Homopolar Generator at The Australian National University	Mar.,1964	Sept., 1967

Copies of this and other Publications (see list inside) of the Department of Engineering Physics may be obtained from:

The Australian National University Press,
P.O. Box 4, Canberra, A.C.T., 2600.
Australia.

Price: $A1.00