Pico-strain multiplexed fiber optic sensor array operating down to infra-sonic frequencies

Ian C. M. Littler, Malcolm B. Gray, Jong H. Chow, Daniel A. Shaddock, and David E. McClelland

Centre for Gravitational Physics, Research School of Physics and Engineering, Australian National University, Canberra, ACT 0200, Australia
** ian.littler@anu.edu.au*

Abstract: An integrated sensor system is presented which displays passive long range operation to 100 km at pico-strain (pε) sensitivity to low frequencies (4 Hz) in wavelength division multiplexed operation with negligible cross-talk (better than −75 dB). This has been achieved by pre-stabilizing and multiplexing all interrogation lasers for the sensor array to a single optical frequency reference. This single frequency reference allows each laser to be locked to an arbitrary wavelength and independently tuned, while maintaining suppression of laser frequency noise. With appropriate packaging, such a multiplexed strain sensing system can form the core of a low frequency accelerometer or hydrophone array.

OCIS codes: (120.4820) Optical systems; (140.3425) Laser stabilization; (140.3490) Lasers, distributed-feedback; (060.4230) Multiplexing; (060.2370) Fiber optics sensors; (060.3735) Fiber Bragg gratings

References and links

1. "The Optical Oilfield – Fibre Optic Seismic for Permanent Seabed Reservoir Monitoring," Business Briefing: Exploration and Production: The Oil and Gas Review **Vol. 2** (2003). *http://www.touchoilandgas.com/optical-oilfield-fibre-optic-a222-1.html*
2. G. A. Cranch, C. K. Kirkendall, K. Daley, S. Motley, A. Bautista, J. Salzano, P. J. Nash, J. Latchem, and R. Crickmore, "Large-scale remotely pumped and interrogated fiber-optic interferometric sensor array," IEEE Photon. Technol. Lett. **15**(11), 1579–1581 (2003).
3. E. Ronnekleiv, O. H. Waagaard, D. Thingbo, and S. Forbord, "Suppression of Rayleigh Scattering Noise in a TDM Multiplexed Interferometric Sensor System," Conference on Optical Fiber communication/National Fiber Optic Engineers Conference, 2008. OFC/NFOEC 2008. 1–3, 24–28 Feb. 2008. URL: *http://ieeexplore.ieee.org/stamp/stamp.jsp?arnumber=4528405&isnumber=4528018*
4. D. J. Hill, P. J. Nash, D. A. Jackson, D. J. Webb, S. F. O'Neill, I. Bennion, and L. Zhang, "A fiber laser hydrophone array," in Proc. SPIE Conf. Fiber Optic Sensor Technology and Applications Boston, MA, **3860**, 55–66 (1999).
5. S. Foster, A. Tikhomirov, M. Milnes, J. van Velzen, and G. Hardy, "A fiber laser hydrophone," Proc. SPIE **5855**, 627–630 (2003).
6. R. W. P. Drever, J. L. Hall, F. V. Kowalsky, J. Hough, G. M. Ford, A. J. Munley, and H. Ward, "Laser phase and frequency stabilization using an optical resonator," Appl. Phys. B **31**(2), 97–105 (1983).
7. J. H. Chow, I. C. M. Littler, G. de Vine, D. E. McClelland, and M. B. Gray, "Phase-sensitive interrogation of fiber Bragg grating resonators for sensing applications," J. Lightwave Technol. **23**(5), 1881–1889 (2005).
8. J. H. Chow, D. E. McClelland, M. B. Gray, and I. C. Littler, "Demonstration of a passive subpicostrain fiber strain sensor," Opt. Lett. **30**(15), 1923–1925 (2005).
9. J. H. Chow, I. C. Littler, D. E. McClelland, and M. B. Gray, "Laser frequency-noise-limited ultrahigh resolution remote fiber sensing," Opt. Express **14**(11), 4617–4624 (2006), http://www.opticsinfobase.org/abstract.cfm?URI=oe-14-11-4617.
10. D. Shaddock, B. Ware, P. G. Halverson, R. E. Spero, and B. Klipstein, "Overview of the LISA Phasemeter," AIP Conf. Proc. Laser Interferometer Space Antenna: 6th International LISA Symposium, November 29, 2006, **873**, 654–660 (2006).
11. C. Greiner, B. Boggs, T. Wang, and T. W. Mossberg, "Laser frequency stabilization by means of optical self-heterodyne beat-frequency control," Opt. Lett. **23**(16), 1280–1282 (1998), http://www.opticsinfobase.org/abstract.cfm?URI=ol-23-16-1280.
12. J. H. Chow, J. S. Cumpston, I. C. M. Littler, D. E. McClelland, and M. B. Gray, "Interrogation of a passive fiber Bragg grating resonator sensor by current modulation of a diode laser," *Lasers and Electro-Optics Society, 2005. LEOS 2005. The 18th Annual Meeting of the IEEE*, 818–819, 22–28 Oct. 2005. *http://ieeexplore.ieee.org/stamp/stamp.jsp?arnumber=1548251&isnumber=33016*

#108275 - $15.00 USD Received 3 Mar 2009; revised 30 Apr 2009; accepted 15 Jun 2009; published 18 Jun 2009

13. B. Lissak, A. Arie, and M. Tur, "Highly sensitive dynamic strain measurements by locking lasers in fiber Bragg gratings," Opt. Lett. **23**(24), 1930–1932 (1998).
14. D. S. Elliott, R. Roy, and S. J. Smith, "Extracavity laser bandshape and bandwidth modification," Phys. Rev. A **26**(1), 12–18 (1982).
15. T.-C. Zhang, J.-Ph. Poizat, P. Grelu, J.-F. Roch, P. Grangier, F. Marin, A. Bramati, V. Jost, M. D. Levenson, and E. Giacobino, "Quantum noise of free-running and externally-stabilized laser diodes," Quantum Semiclassic. Opt. **7**(4), 601–613 (1995).
16. A. D. Kersey, M. A. Davis, H. J. Patrick, M. LeBlanc, K. P. Koo, C. G. Askins, M. A. Putnam, and E. J. Friebele, "Fiber grating sensors," J. Lightwave Technol. **15**(8), 1442–1463 (1997).
17. K. H. Wanser, "Fundamental phase noise limit in optical fibres due to temperature fluctuations," Electron. Lett. **28**(1), 53–54 (1992).

1. Introduction

Fiber optic array sensor systems are currently being trialed for geophysical survey, particularly in oil and gas exploration. The promise is for systems which leverage the natural advantages of fiber optics to create arrays which are more robust, reliable and easier to deploy than current electronic solutions [1]. At the core of all fiber optical based accelerometers or hydrophone sensors is a measurement of fiber strain via the strain induced phase change in a light field.

A large-scale sensor array system requires many channels multiplexed onto a single fiber, with low cross-talk between channels, operation over a long range (100 km), preferably completely passive, with sensitivity better than 10 pε/√Hz in a signal bandwidth extending to the low Hz range. Additionally, the system should possess low complexity and loss in the fiber optic portion of the system. Various systems have been proposed and demonstrated over the last two decades and, while some are very suitable for particular applications, they have limitations for use in large-scale systems.

Cranch et al. [2] have investigated fiber optic two-beam interferometers in creating a passive large-scale hydrophone sensor array, interrogated by fiber lasers. Operation up to 40 km was demonstrated at that time. A remotely pumped optical amplifier was required for ranges greater than a few kilometers because of the high losses of the system. The high loss is due mainly to the use of high channel count time-division-multiplexing (TDM) schemes requiring the use of lossy cross-couplers in the sensors.

An alternative to broadband dual arm interferometers, requiring many additional optical components for multiplexing, is the use of intrinsically channeled devices, based on fiber Bragg gratings (FBGs), to measure fiber strain. Ronnekleiv et al. [3] have devised a system which extracts four TDM channels of sensor information via the interference of reflections from four partially reflecting FBGs, each separated by coils (>20 m) of fiber. The system displays lower loss when compared with Cranch et al. [2], as a result of keeping the number of TDM channels to a minimum. Since the signals can only be retrieved in reflection, a complicated modulation scheme is required to keep the noise due to Rayleigh back scattering (RBS) below the required level. Operation over a length of fiber, containing the sensors, of 1.1 km has been demonstrated.

Active sensors, using remotely pumped Erbium doped fiber lasers with wavelength selective in-fiber Bragg end mirrors, are also being considered for hydrophone sensor systems [4,5]. In these systems, the sensitivity below 100 Hz is significantly limited by laser frequency noise since the sensor is a free running laser. The requirement for remote pumping of the lasers can curtail the range of operation. Moreover, inadequate sidelobe suppression has limited the density of multiplexing demonstrated thus far.

An alternative approach is use passive Fabry Perot structures constructed using in-fiber Bragg mirrors. Rather than using long fiber coils as in two-beam interference, multi-beam interference of the light bouncing between the Bragg mirrors amplifies the effect of fiber strain on the phase of the light. Strain perturbations lead to minute shifts in the frequency or wavelength of the Fabry Perot modes and these can be detected using sensitive RF modulation and signal extraction techniques [6,7]. In this case, since the interrogation laser source is external to the sensor, it is possible to frequency stabilize the laser to improve vastly the sensitivity of the sensor below 100 Hz.

#108275 - $15.00 USD Received 3 Mar 2009; revised 30 Apr 2009; accepted 15 Jun 2009; published 18 Jun 2009

Previous work using this technique was typically proof-of-principle type work for the various subsystems [8,9], with often orders of magnitude difference in performance from that reported here. New aspects of this work include: picostrain performance below 100 Hz (4 Hz reported here); picostrain sensitivity beyond 31 km (100 km reported here); multiplexing of sensors onto a single fiber as well as the multiplexing frequency stabilization scheme. Now, for the first time we have achieved a fully integrated system that simultaneously provides this breakthrough combination of capabilities.

The system further possesses low optical component complexity, very low loss and is completely passive. The key to satisfying all the requirements has been the combination of a flexible laser frequency noise suppression method and Pound-Drever-Hall (PDH) locking and signal extraction [6] for sensor readout.

This approach has the potential for use in large-scale hydrophone and accelerometer arrays. At the core of the optical phase measurement is a strain sensor only a few centimeters long. Therefore, transducers based on this sensor can be smaller, less complex and exhibit lower loss than two beam interferometric sensors with fiber coils many tens of meters long. Indeed, many favorable aspects are intrinsic to the sensor design and sensor interrogation method i.e. robustness to fiber defects and environmental factors, low total system loss, as well as low complexity of the optical fiber portion of the system.

The processing of the signals used for stabilization and sensor readout has been implemented in the digital domain using digital signal processing. Digital implementation brings several advantages including an improvement of low frequency noise of the mixing process compared with analog mixers [10]. In addition, since real applications of this technology will involve many hundreds of sensors, a digital approach is easily scalable, flexible, and reconfigurable.

In Section 2, the methodology is introduced by which an array of lasers is pre-stabilized, allowing simultaneous strain detection within four wavelength division multiplexed sensor channels. In Section 3, the strain sensitivity spectra for closed loop concurrent operation of the interrogation lasers are presented, exhibiting high performance down to infra-sonic frequencies. In the same Section, the inter-channel cross-talk, dynamic range and operation at long range of the array are also discussed. This is followed by concluding remarks.

2. Methodology

The sensor is based on a fiber Fabry Perot interferometer (FFPI) with in-fiber Bragg mirrors written into the core of a single mode optical fiber. Using fiber Bragg gratings (FBGs) creates an intrinsically channelized solution requiring no additional wavelength selective components. The spectra of the FFPIs are appropriately distributed in wavelength space as in Fig. 1 and the FBGs well apodized to ensure minimal overlap of grating sidelobes with neighboring channels, minimizing cross-talk. In addition, the FFPIs are impedance matched, reflecting little light on resonance, reducing the possibility of interacting with reflections from neighboring channel sidelobes, further minimizing cross-talk.

Strain perturbations are converted into changes in light phase, which are detected via sensitive and robust RF modulation techniques. This RF technique has been described in detail in reference [7]. Briefly, a laser is phase modulated (PM) at a radio frequency F_{RF} and tuned to one mode of an FFPI, which forms the strain sensor. Changes in fiber strain induce changes in the resonant frequency of the FFPI mode. This detuning of the mode from the laser frequency creates an asymmetric phase delay for the sidebands and causes a conversion of phase modulation (PM) into amplitude modulation (AM). After demodulation of the AM, this 'error signal' is proportional to the induced strain signal to first order. This signal extraction technique is extremely well suited to this application since it is immune to polarization wander and to intensity fluctuations in the laser.

#108275 - $15.00 USD Received 3 Mar 2009; revised 30 Apr 2009; accepted 15 Jun 2009; published 18 Jun 2009

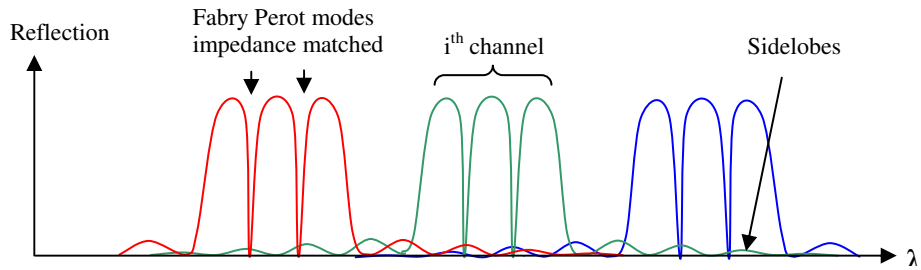

Fig. 1. The reflection spectra of three closely spaced FFPI channels. Clearly shown are two Fabry Perot modes, which are impedance matched. Only one mode is employed for sensing in each channel. The out-of-band sidelobes, due to imperfect apodization of the FBGs, shown here are not to scale. Coupled with reflections from the slight impedance mismatch, these can cause inter-channel cross-talk.

Using this technique, a strain measurement, which is not limited by laser or electronic noise, should be at the shot noise limit as given by the following Eq. (8)

$$strain(\varepsilon / \sqrt{Hz}) = \Delta \nu_{FFPI} \sqrt{\frac{h}{8\eta \nu P}} , \qquad (1)$$

where $strain(\varepsilon/\sqrt{Hz})$ is the strain noise spectral density as a function of the frequency of the light ν, the light power P and the FWHM of the Fabry Perot mode $\Delta\nu_{FFPI}$. The detector quantum efficiency is given by η. For 20 μW of light at 1550 nm, with FWHM 100MHz and quantum efficiency 0.9, this yields a negligible shot noise limited strain of 0.02 pε/√Hz.

We employ DFB diode lasers to interrogate the sensors because they are relatively inexpensive and also possess a small foot print of a couple of cm^2, permitting scaling to large array element numbers. The laser diode current is modulated to provide RF phase modulation of the light for RF interrogation of the sensors. Importantly, in contrast to the results in reference [8], the small (<1000 μm) monolithic structure of DFB lasers means the laser spectra are free of features caused by acousto-mechanical resonances of internal components as in the long (3 cm) extended cavity laser used previously. The flipside is that their intrinsic linewidths are not as narrow. They require active stabilization to reduce the laser frequency noise.

The technique employed to stabilize an array of lasers is based on a method for stabilizing a single laser using a length imbalanced heterodyned, Mach Zehnder interferometer, where the phase of the interferometer output signal is indicative of the laser frequency [11]. We use a Mach-Zehnder Interferometer because it enables the stabilization of a laser at an arbitrary wavelength. By using suitable multiplexing components, many lasers can be stabilized to a single frequency reference at many different wavelengths.

Briefly, an interferometer, where the arms have different optical path lengths, possesses a sinusoidal frequency response over a wide wavelength band. In order to gain information about the frequency noise of the laser, the quadrature information about the phase of the interferometer is extracted. This is achieved by frequency shifting the light in one arm of the interferometer by a fixed RF frequency F_{AOM} using an acousto-optic modulator (AOM). Note that F_{AOM} is chosen to be smaller than F_{RF} to enable RF filtering of residual AM at F_{RF}. After recombining the shifted light with the light in the other arm, the output varies sinusoidally at F_{AOM}, with the phase of that signal proportional to the wavelength of the laser. The length imbalance of the interferometer ΔL determines how sensitive the phase of this modulation is to the frequency of the laser as given by the following Eq. (11).

#108275 - $15.00 USD Received 3 Mar 2009; revised 30 Apr 2009; accepted 15 Jun 2009; published 18 Jun 2009

$$I_{beat}(t) \propto E_0(t)E_0(t-\frac{n\Delta L}{c})$$
$$x\cos\left\{2\pi\left[\int_{t-\frac{n\Delta L}{c}}^{t} \nu(t')dt' + F_{AOM}t + \varphi\right]\right\} \quad (2)$$

Here E_0 is the real valued amplitude of the electric field in each arm, ν is the instantaneous frequency of the light, F_{AOM} is an offset frequency introduced by the AOM and ϕ is the AOM start phase. The term $n\Delta L/c$, where $n\Delta L$ is the optical path difference with n the refractive index and c the speed of light, gives the time delay introduced by the path length imbalance.

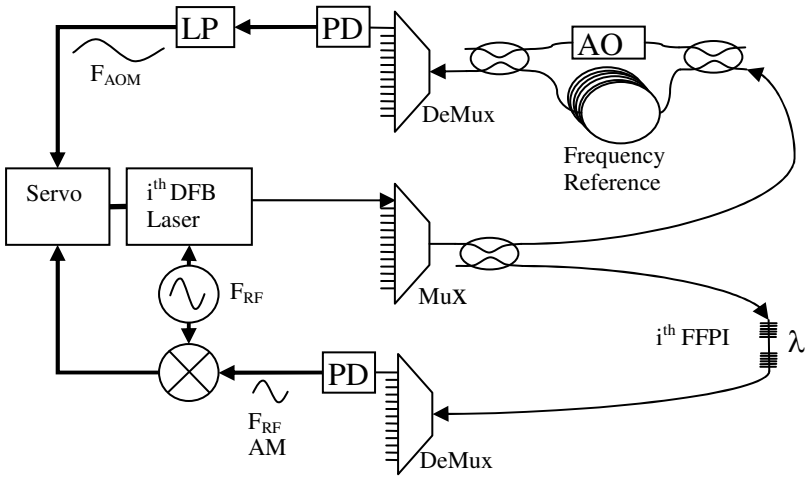

Fig. 2. Simplified overview schematic of the sensor system. Upper circuit: A number of lasers are multiplexed to a single frequency reference, which performs a laser frequency to RF phase conversion. Subsequent demultiplexing, and low pass filtering to remove residual F_{RF}, enables noise suppression of each individual laser via a phase measurement and a feedback via a servo to the laser current. Lower circuit: Each laser is locked to a Fabry Perot mode of each sensor, with feedback to the laser current and sensor readout achieved via an RF modulation technique. Conversion of PM to AM at the FFPI creates a measure of the sensor strain.

A simplified overview schematic for the complete sensor system is shown in Fig. 2. For simplicity, only one channel i.e. one laser and one sensor, together with the respective photo-detectors, are shown. The multiplexing components indicate how additional lasers and photo-detectors channels are added. Additional FFPI sensors are added in series to the fiber.

Referring to Fig. 2, the lower circuit shows how the RF modulation technique is used to extract sensor information, while the upper circuit shows the frequency reference used to stabilize the array of lasers. Each laser is current modulated at the same frequency F_{RF}, to create the sidebands required for signal extraction. Note that by current modulating, the light will also contain some residual AM but this is not deleterious to the signal extraction [12]. The light of each laser interacts with the FFPI sensor with which it is resonant, converting phase modulation into amplitude modulation, which is proportional (to first order) to the frequency mismatch between the laser carrier frequency and the FFPI resonance. A baseband error signal is created by subsequent demodulation, which is representative of the strain signal on the FFPI. This error signal is fed back to the laser via a servo, to lock to the laser to the FFPI. The sensor signal can be readout either open loop, when the signal bandwidth is greater than the locking bandwidth, or closed loop when the signal bandwidth is smaller than the locking bandwidth

#108275 - $15.00 USD Received 3 Mar 2009; revised 30 Apr 2009; accepted 15 Jun 2009; published 18 Jun 2009

A portion of the light is sent to the length imbalanced Mach-Zehnder interferometer. The optical signal containing information about the frequency noise of each laser is demultiplexed and converted into an electrical signal at each respective photo-detector. At this point, residual amplitude modulation from the signal extraction technique (at F_{RF}) is removed by low pass filtering. The phase of the signal is measured by mixing it with a local oscillator (LO) and fed back to the laser actuator via an appropriate servo to suppress the frequency noise of each laser.

The signal driving the laser frequency is the RF phase or integrated frequency difference between the instantaneous signal from the frequency reference and the LO. Tuning of an individual laser to follow drift in the FFPIs is achieved by changing the local oscillator frequency. The AOM frequency always remains fixed. The frequency difference is integrated to generate an accumulated phase, which is then fed back to the lasers to cause the wavelength change. Note that relatively small frequency differences can drive large laser frequency excursions (due to the integration of this frequency difference over time) which are limited only by the range of the laser frequency actuators. A mismatch of just 10 Hz will tune the laser by 100 MHz in a second.

All processing, such as, signal synthesis, mixing and filtering, occurs in the digital domain. Analog RF electrical signals from the photo-detectors (PD) are digitized using fast analog to digital converters (ADC's). In the digital domain, functions normally performed in an analog fashion, i.e. with voltage-controlled oscillators, mixers, adders and multipliers, now become mathematical operations. All signals F_{AOM}, F_{LO} and F_{RF} are synthesized from the same clock signal by creating a phase ramp with the required time derivative and then driving a sine look-up table in a loop. This generates sinusoidal signals tied solidly to the cycle clock. The digital output of each servo loop is then converted into an analog signal, via digital to analog converters (DAC's), to drive the laser frequency actuators.

3. Results and Discussion

3.1. Single channel - noise suppressed

In Fig. 3, the frequency noise spectra are shown for a single laser in a band from 1 Hz up to 5 kHz, for both the case of the free running laser and when the laser is noise suppressed. The laser used was a JDSU CQF 935/708 series 40 mW DFB laser, with a linewidth given as <1 MHz. It was operated at 20 mW and then attenuated by approximately 10 dB before entering the sensor system, which attenuated the light by a further 10 dB. Approximately, 200 μW were available at the photo-detector.

An out-of-loop measurement, using one of the fiber Fabry Perot interferometers, was performed to determine the frequency noise on the laser in each case. When this laser was free running, the noise follows a roughly inverse square root of frequency law starting at 400 Hz/√Hz at 5 kHz and rising to 10 kHz/√Hz at 10 Hz.

Following [13–15] and assuming flat white noise at 400 Hz/√Hz, a lower limit for the FWHM of the laser $\Delta\nu_{Laser}$ may be obtained

$$\Delta\nu_{Laser} = \pi S_f^2 \tag{3}$$

where S_f is the spectral noise density. This yields a linewidth of 0.5 MHz FWHM, which is consistent with the manufacturer's specification.

When locked to the optical frequency reference, the laser frequency noise can be reduced by up to two orders of magnitude to just below 400 Hz/√Hz over a wide band. The stabilized laser spectrum is essentially flat, with a few negligible features from 5 kHz down to 4 Hz, dipping below 400 Hz/√Hz for most of the spectrum. Note the suppression of the A.C. lines at 50 Hz, 150 Hz, 250 Hz & 350 Hz. Indeed, the reduction in the 50 Hz peak is by over a factor of 40.

#108275 - $15.00 USD Received 3 Mar 2009; revised 30 Apr 2009; accepted 15 Jun 2009; published 18 Jun 2009

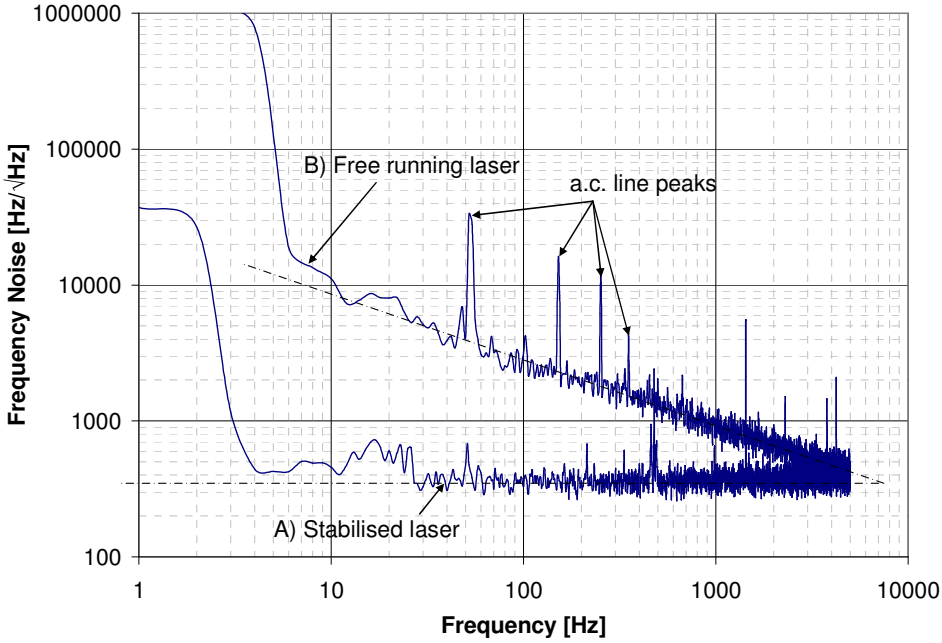

Fig. 3. An out-of-loop measurement yields A) the frequency noise of the laser when locked to the frequency reference compared to B) the frequency noise of the free running laser. The small resonances at 20 Hz and 480 Hz are not laser frequency noise but an artifact introduced by mechanical pick-up

Strain can be inferred from the frequency noise of the laser according to a formula given by Kersey *et al*. [16] for λ_B = 1550 nm

$$\frac{\delta\varepsilon}{\delta\nu_B} = \frac{\lambda_B}{0.78\,c} = 6.6\,x10^{-15}\,\varepsilon\,/\,Hz \tag{4}$$

where the subscript *B* refers to the Bragg condition for the grating and *c* is the speed of light in a vacuum.

Thus from the residual broadband noise of 400 Hz/√Hz, a strain noise floor approximately 2 pε/√Hz may be inferred. As a direct measurement, a known strain signal may be applied to the sensor to calibrate the vertical axis. This cross-check is performed in the multiplexed data which follows in the next Section.

The small broad peak between 10 Hz and 30 Hz consists of optical table drum modes, which couples into the fiber Fabry Perot used for the out-of-loop measurement. Similarly, the resonance in the closed loop signal at approximately 480 Hz is also an artifact, being a particular mechanical resonance of the mount for the FFPI or a fiber violin mode. Therefore, the actual absolute noise floor at those frequencies is slightly lower than shown in the neighborhood of 20 Hz.

Note, the Mach Zehnder interferometer demonstrated very low mechanical susceptibility and provided a low noise optical frequency reference to which to lock the lasers. It consists of an appropriate length of fiber (20 m) for the laser linewidth and optical gain required. This is firmly wound on a rigid spool with all fibers and components mounted to minimize acousto-mechanical pick-up. The Mach-Zehnder in then placed in an acoustically isolated box which is mechanically isolated from the optical table. The optical reference is mounted on a separate optical table from the FFPIs, to minimize common mode noise and assist in noise source

#108275 - $15.00 USD Received 3 Mar 2009; revised 30 Apr 2009; accepted 15 Jun 2009; published 18 Jun 2009

tracking. These precautions meant that there was negligible coherent or common noise imposed on the lasers used for sensor readout.

Thermal noise [17] is computed to be negligible in both the Mach-Zehnder and the FFPI sensor. For an FFPI of length 5 cm, the thermal noise is 3 Hz/√Hz and for the Mach-Zehnder of arm length 20 m it is 0.15 Hz/√Hz, being two and three orders of magnitude smaller than required, respectively. The lasers are relatively immune to acousto-mechanical pick-up being small (200 μm) monolithic structures, with any pick-up suppressed via feedback.

3.2. Dynamic range of the sensor

The dynamic range is defined as the ratio of the peak-to-peak signal to the root mean square (rms) noise for a given signal bandwidth. In the present implementation, the measurements of strain have been made open loop, with respect to the lower loop in Fig. 2. Consequently, the peak signal is limited by the width of the FFPI mode, being 100 MHz. In a signal bandwidth of 400 Hz, the dynamic range is 82 dB for a stabilized laser noise floor of 400 Hz/√Hz. In closed loop operation, the system would be limited by the ± 2 GHz laser actuator range, implying a closed loop dynamic range of 115 dB.

3.3. Multiplexed multi-channel - noise suppressed

We now examine the performance of the multiplexed stabilization system when four lasers, operating concurrently, are locked to the reference and used to interrogate a multiplexed sensor array as in Fig. 2. The array of lasers consisted of one DFB laser from JDSU with a linewidth of <1 MHz FWHM and three DFB lasers from FITEL with linewidths of 3 MHz FWHM. For all lasers, approximately 200 μW were available at the photo-detectors.

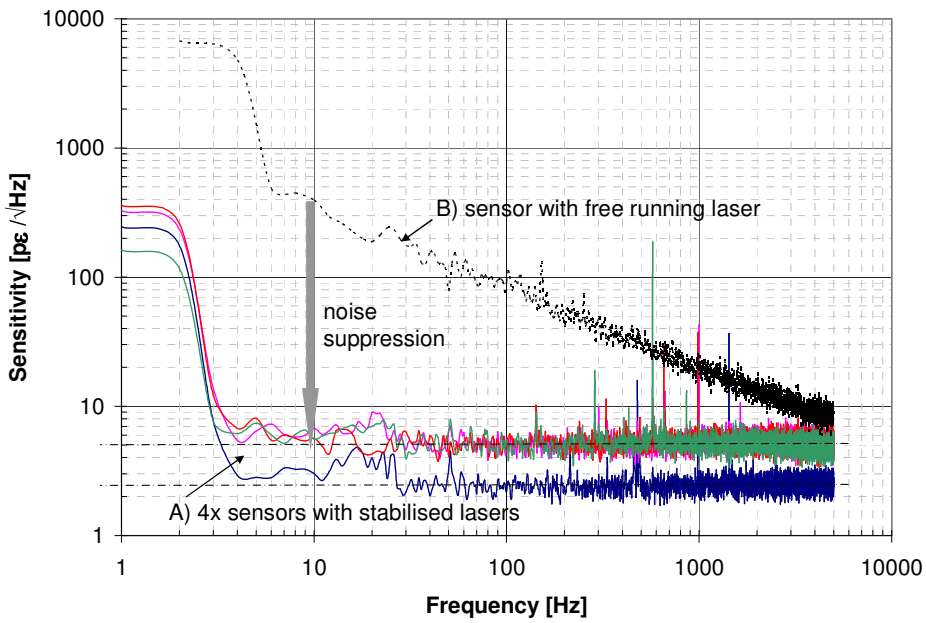

Fig. 4. A) Strain spectra of each of the four sensors interrogated by its respective pre-stabilized laser, with all lasers operating concurrently. B) The strain spectra of one sensor when a free running laser is used to interrogate it. The suppression at 10 Hz of frequency noise is approximately two orders of magnitude.

In Fig. 4, the calibrated strain noise floors of four multiplexed sensor channels are shown, under closed-loop operation for frequency noise suppression. The strain spectrum for a one representative free running laser is also shown for comparison with the noise suppressed laser spectra. The vertical axis is calibrated by applying a known strain dither via a PZT to each of the FFPI sensors.

#108275 - $15.00 USD Received 3 Mar 2009; revised 30 Apr 2009; accepted 15 Jun 2009; published 18 Jun 2009

The noise suppression approaches two orders of magnitude at 10 Hz. The ultimate noise floor achieved, in each case, is independent of the gain in the servo loop but is a function of the individual laser. This is not understood, but extensive testing has shown that the additional noise is neither electronic nor digital. Nevertheless, it is not material for the efficacy of the sensor system. For these particular DFB diode lasers, the noise floor lies between 2 pε/√Hz for the JDSU laser and 5 pε/√Hz for the FITEL lasers. The noise floors are essentially flat, with only a few small features, from 5 kHz down to 4 Hz.

These noise floor spectra, obtained for concurrently operating multiplexed sensor channels, demonstrate that this multiplexed, pre-stabilized strain-sensing scheme is ideal as the basis for sensitive accelerometer and hydrophone arrays consisting of many multiplexed sensors operating in a band extending from 4 Hz up to a few hundred Hz.

3.4. Channel density and cross-talk in the multiplexed multi-channel system

Tightly spaced WDM channels only are used in preference to a scheme based on time division multiplexing (TDM), given the benefits that brings in terms total system loss. The cross-talk amongst the sensor channels was measured for the case when all four lasers were locked to the same frequency reference to suppress the frequency noise in the lasers. A large known strain dither was imposed on one of the sensors and then the strength of this signal was measured in neighboring channels. The cross-talk between channels spaced by 100 GHz (85 channels in 70 nm) was better than −75 dB for neighboring channels and exceeded −110 dB for non-neighboring channels. This level of cross-talk is negligible and the isolation is more than sufficient, even with a channel count of around 80 per fiber.

As already mentioned, the cross-talk stems from a double reflection; first a back-reflection from an FBG sidelobe followed by a reflection from the slightly imperfectly impendence matched FFPIs (or vice versa) back into the direction of the laser light carrying the sensor information. The cross-talk is small since the FFPIs reflect little on resonance and the sidelobe strength is <-40 dB in adjacent channels for a 100 GHz spacing. It decreases further for channels that are even more distant.

Note, since the system requires no optical amplification even at long range, channels may be located at any low fiber transmission-loss wavelength for which lasers, and optical components are available. DFB diode lasers are currently readily available between 1530 nm and 1610 nm, covering a range of 80 nm.

3.5. Long range operation

To test how far the sensor array could be placed from the detection and processing electronics, a 50 km spool of smf-28 was inserted before the four strain sensors and a 50 km spool of smf-28 afterwards. The laser power input into the system was increased, via a variable attenuator, from 2 mW to approximately 20 mW in order to partially compensate for the extra loss in the much longer delivery fiber. The additional fiber attenuated the photo-signal by −20 dB, which meant a net decline in signal to noise ratio (SNR) of −10 dB. The system attenuation was −30 dB, after considering all the optical components. The power available at the detector was 20 μW, which was sufficient light power such that the electronic noise was around the pε level.

The noise spectrum of the lowest noise channel is shown in Fig. 5: A) before, representing the lowest possible noise floor, and B) after adding 100 km of delivery fiber to and from the sensors. The power levels were 200 μW and 20 μW at the photo-detector for each case, respectively. The noise floor is flat in both cases and has only risen, relative to signal, by only 1 pε/√Hz after adding the 100 km of delivery fiber. This negligible degradation in SNR is due to the decreased signal strength relative to the fixed level of electronic noise at the 10 dB lower optical power.

To our knowledge, the long distance performance of this system, at this sensitivity, has not been demonstrated in any other multiplexed optical fiber strain sensor system. The performance is due to the low loss of the optical architecture, which exploits tightly spaced WDM channels rather than a mixture of WDM and intrinsically lossy TDM. Further serving

#108275 - $15.00 USD Received 3 Mar 2009; revised 30 Apr 2009; accepted 15 Jun 2009; published 18 Jun 2009

to keep system loss low is the fact that, unlike other multiplexed systems, transducers based on these FFPI sensors would consist of straight fiber lengths on a centimeter scale with low splice loss to standard smf-28 fiber, rather than long coils of fiber where bend-loss diminishes the signal to noise ratio. The system performance is also attributable to the sensitive signal extraction technique, which is, in principle, shot noise limited.

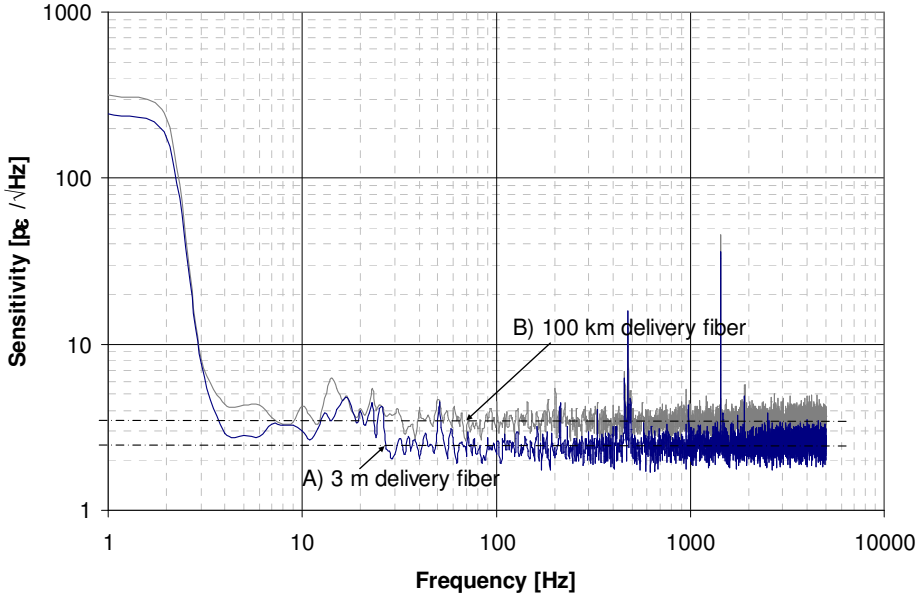

Fig. 5. Strain spectrum of the lowest noise channel A) with only a few meters of fiber delivering the light to and from the sensors and B) with 100 km of delivery fiber. The slight rise in the noise floor is negligible and is due to the lower signal to electronic noise, when the light arrives at the photo-detector after 100 km of fiber and net signal strength decline of −10 dB.

Finally, operation of optical sensors over very long fiber lengths is often plagued by Rayleigh Back Scattering (RBS), which raises the noise floor. The transmission topology demonstrated here is immune to first order RBS allowing operation over these very long fiber lengths. Likewise, given the relatively broad linewidth of these types of lasers, optical launch powers are not limited by Stimulated Brilluoin Scattering (SBS) [2].

4. Conclusion

An easily scalable, multiplexed strain sensor system has been demonstrated which has a flat noise floor at the pico-strain level in a band extending from 5 kHz down to the infra-sonic at 4 Hz. Moreover, the servo allows suppression of frequency noise and the possibility to tune the frequency of each individual to follow in-band perturbations to the sensor.

The cross-talk between neighboring channels is better than −75 dB, and exceeds −110 dB for non-neighboring channels. In the present configuration, signal measurements are performed open loop, enabling a dynamic range of 82 dB in a 400 Hz signal bandwidth. In closed loop operation, the implied dynamic range is 115 dB.

For situations where the sensors must be located remotely from the processing electronics, we have demonstrated operation at a range of 100 km, without optical amplification and negligible degradation in signal to noise. The sensor array portion of the system is entirely passive even over very long transmission distances.

This strain-sensor array system is ideal, after appropriate transducer packaging, as the basis for low loss, long-range accelerometer, and hydrophone arrays requiring sensitive detection in a band from 4 Hz up to at least a few hundred Hz and beyond.

#108275 - $15.00 USD Received 3 Mar 2009; revised 30 Apr 2009; accepted 15 Jun 2009; published 18 Jun 2009

Acknowledgements

This work is supported by the Australian Research Council and Benthic Geotech Pty Ltd under linkage grant LP0667937. This systems technology and these methods are protected by international patents, patents pending and patent applications.

#108275 - $15.00 USD Received 3 Mar 2009; revised 30 Apr 2009; accepted 15 Jun 2009; published 18 Jun 2009